METAL CUTTING BAND SAW MACHINE

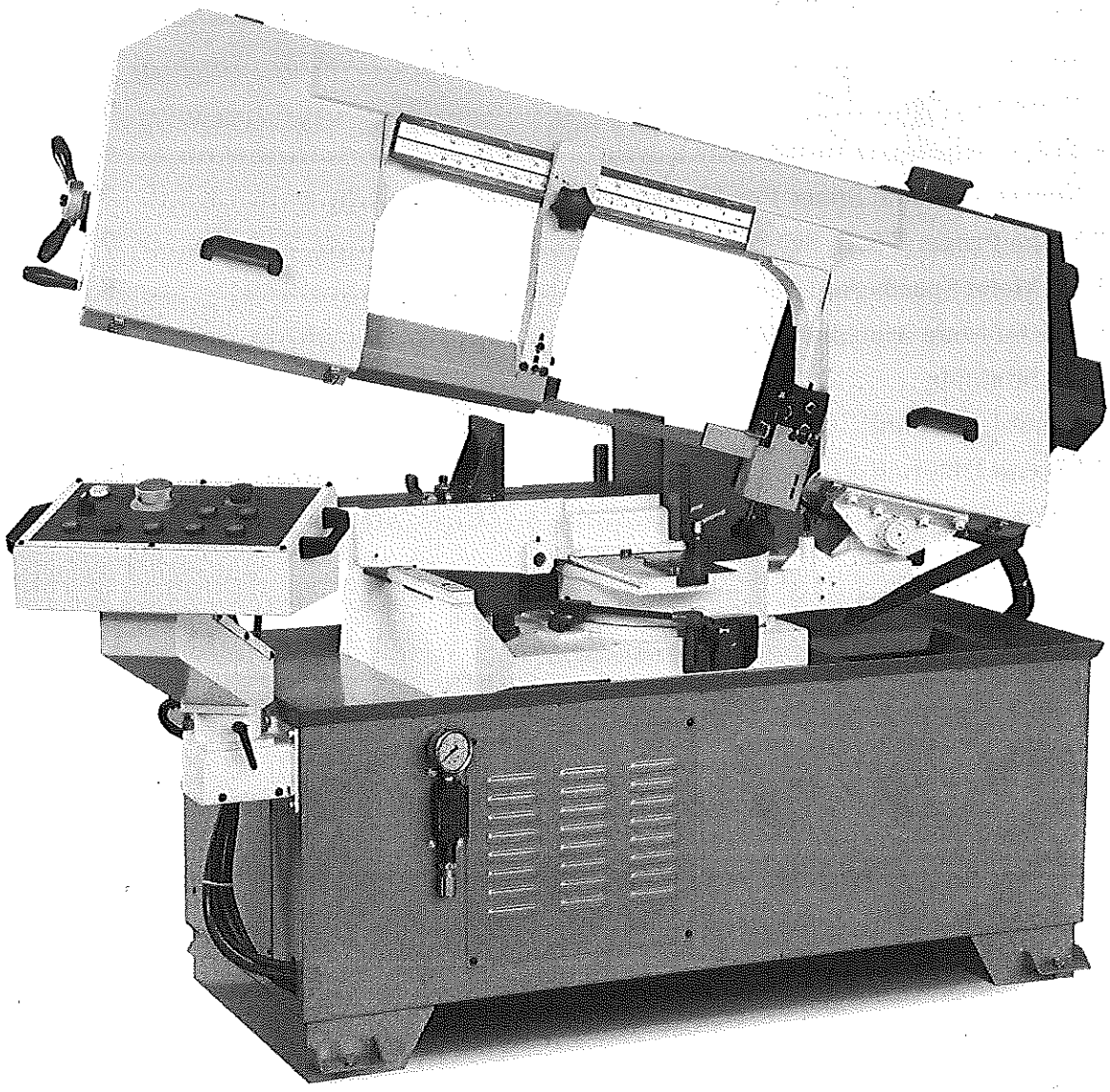

MODEL: 330N / 330NA/330NAA

INSTRUCTION MANUAL

330N-330NAA-120919-R0

Table Of Contents Page No

1 Overall Aspect 2
2 Safety Rules For All Tools 3
3 Specification 5
4 Features 5
5 Transportation & Install 6
6 Minimum Room Space For Machine Operation 7
7 Make Proper Tooth Selection 7
8 BI-Metal Speeds And Feeds 8
9 Use Of Main Machine Parts 10
10 Maintaining 16
11.Trouble shooting 16
12 Circuit Diagram 19
13 Parts Lists 23

Overall Aspect

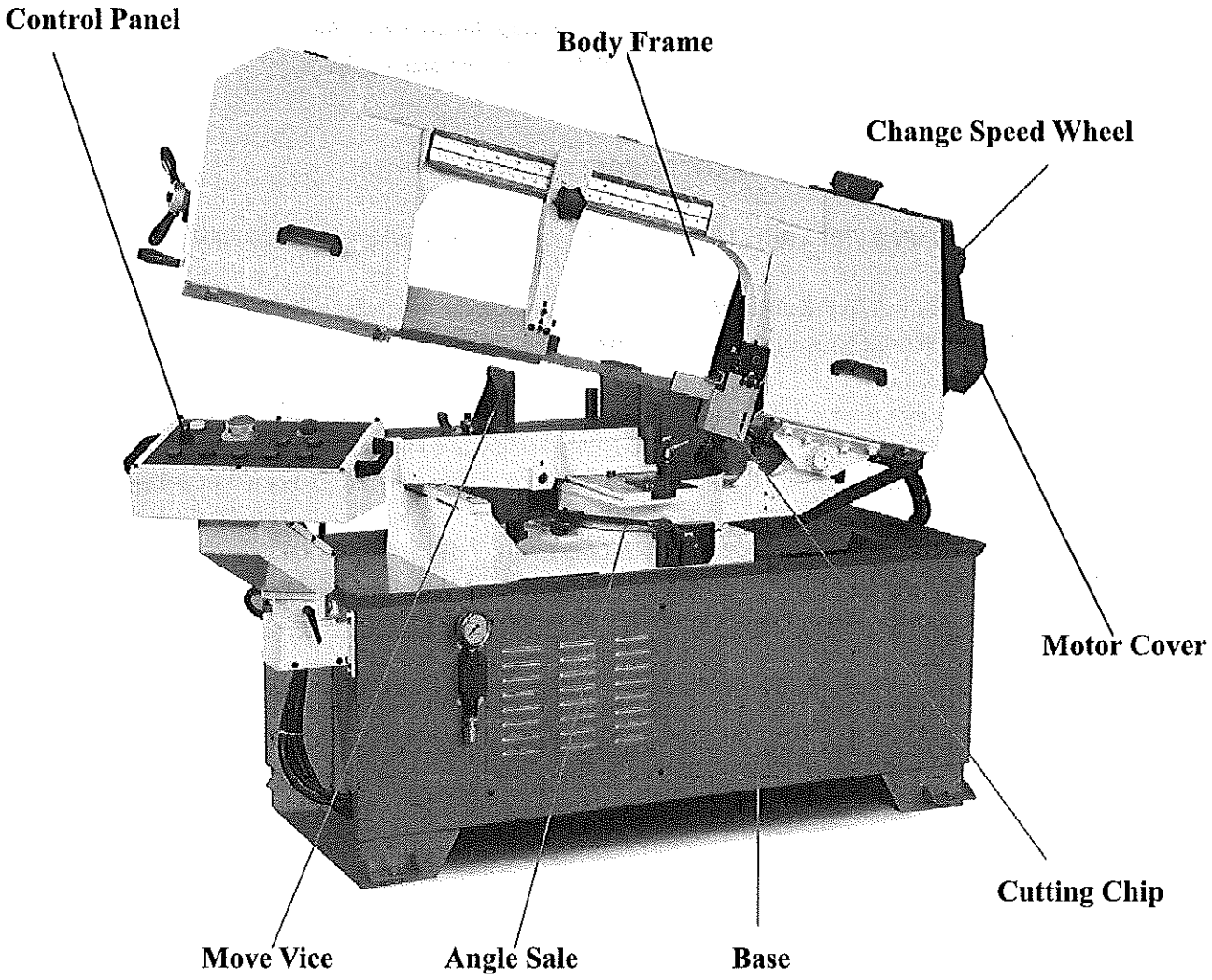

WARNING: FAILURE TO FOLLOW THESE RULES
MAY RESULT IN SERIOUS PERSONAL INJURY

As with all machinery there are certain hazards involved with operation and use of the machine. Using the machine with respect and caution will considerably lessen the possibility of personal injury. However, if normal safety precautions are overlooked or ignored, personal injury to the operator may result.
This machine was designed for certain applications only. We strongly recommend that this machine NOT be modified and/or used for any application other than for which it was designed. If you have any questions relative to its application DO NOT use the machine until you contact with us and we have advised you.

Your machine might not come with a power socket or plug. Before using this Machine, please do ask your local dealer to install the socket or plug on the Power cable end.

2.SAFETY RULES FOR ALL TOOLS

A. USER:

(1). **WEAR PROPER APPAREL.** No loose clothing, gloves, rings, bracelets, or other jewelry to get caught in moving parts.
Non-slip footwear is recommended. Wear protective hair covering to contain long hair.
(2). **ALWAYS WEAR EYE PROTECTION.** Refer to ANSLZ87.1 standard for appropriate recommendations.
Also use face or dust mask if cutting operation is dusty.
(3). **DON'T OVERREACH.** Keep proper footing and balance at all times.
(4). **NEVER STAND ON TOOL.** Serious injury could occur if the tool is tipped or if the cutting tool is accidentally contacted.
(5). **NEVER LEAVE TOOL RUNNING UNATTENDED. TURN POWER OFF.** Don't leave tool until it comes to a complete stop.
(6). **DRUGS, ALCOHOL, MEDICATION.** Do not operate tool while under the influence of drug, alcohol or any medication.
(7). **MAKE SURE TOOL IS DISCONNECTED FROM POWER SUPPLY.** While motor is being mounted, connected or reconnected.
(8). **ALWAYS** keep hands and fingers away from the blade.
(9). **STOP** the machine before removing chips.
(10). **SHUT- OFF** power and clean the BAND SAW and work area before leaving the machine.
(11).DO NOT Touch the cutting Blade while the machine is turm on.

B. USE OF MACHINE:

(1). **REMOVE ADJUSTING KEYS AND WRENCHES.** Form habit of checking to see that keys and adjusting wrenches are removed from tool before turning it "on".
(2). **DON'T FORCE TOOL.** It will do the job better and be safer at the rate for which it was designed.
(3). **USE RIGHT TOOL.** Don't force tool or attachment to do a job for which it was not designed.
(4). **SECURE WORK.** Use clamps or a vise to hold work when practical. It's safer than using your hand frees both hands to operate tool.
(5). **MAINTAIN TOOLS IN TOP CONDITION.** Keep tools sharp and clean for best and safest performance. Follow instructions for lubricating and changing accessories.
(6). **USE RECOMMENDED ACCESSORIES.** Consult the owner's manual for recommended accessories. The use of improper accessories may cause hazards.
(7). **AVOID ACCIDENTAL STARTING.** Make sure switch is in **"OFF"** position before plugging in power cord.

(8). **DIRECTIONOF FEED**. Feed work into a blade or cutter against the direction of rotation of the blade or cutter only.
(9). **ADJUST AND POSITION** the blade guide arm before starting the cut.
(10). **KEEP BLADE GUIDE ARM TIGHT**, A loose blade guide arm will affect sawing accuracy.
(11). **MAKE SURE** blade speed is set correctly for material being cut.
(12). **CHECK** for proper blade size and type.
(13). **STOP** the machine before putting material in the vise.
(14). **ALWAYS** have stock firmly clamped in vise before starting cut.
(15). **GROUNDALL TOOLS**. If tool is equipped with three-prong plug, it should be plugged into a three-hole electrical receptacle. If an adapter is used to accommodate atwoprong receptacle, the adapter lug must be attached to a known ground. Never removed the third prong.

C. ADJUSTMENT :

MAKE all adjustments with the power off. In order to obtain the machine. precision and correct ways of adjustment while assembling, the user should read the detailed instruction in this manual.

D. WORKING ENVIRONMENT:

(1). **KEEP WORK AREA CLEAN.** Cluttered areas and benches invite accidents.
(2). **DON'T USE IN DANGEROUS ENVIRONMENT.** Don't use power tools in damp or wet locations, or expose them to rain. Keep work area well-lighted.
(3). **KEEP CHILEREN AND VISITIORS AWAY.** All children and visitors should be kept a safe distance from work area.
(4). **DON'T** install & use this machine in explosive, dangerous environment.

E. MAINTENANCE:

(1). **DISCONNECT** machine from power source when making repairs.
(2). **CHECK DAMAGED PARTS**. Before further using of the tool, a guard or other part that is damaged should be carefully checked to ensure that it will operate properly and perform its intended function. Check for alignment of moving parts, binding of moving parts, breakage of parts, mounting, and any other conditions that may affect its operation. A guard or other part that is damaged should be properly repaired or replaced.
(3). **DISCONNECT TOOLS** before servicing and when changing accessories such as blades, bits, cutters, etc.
(4). **MAKE SURE** that blade tension and blade tacking are properly adjusted.
(5). **RE-CHECK** blade tension after initial cut with a new blade.
(6). **TO RPOLONG BLADE LIFE ALWAYS** release blade tension at the end of each workday.
(7). **CHECK COOLANT DAILY** Low coolant level can cause foaming and high blade temperatures. Dirty coolant can clog pump, cause crooked. Rust, low cutting rate and permanent blade failure. Dirty coolant can cause the growth of bacteria with ensuing skin irritation.
(8). **WHEN CUTTING MAGNESIUM NEVER** use soluble oils or emulsions(oil-water mix) as water will greatly intensify any accidental magnesium chip fire. See your industrial coolant supplier for specific coolant recommendations when cutting magnesium.
(9). **TO PRNMT** corrosion of machined surfaces when a soluble on is used as coolant, pay particular attention to wiping dry the surfaces where fluid accumulates and does not evaporate quickly, such as between the machine bed and vise.

F. SPECTIFIED USAGE:

This machine is used only for general metals cutting within the range of cutting capacity.

G. NOISE:

A weighted sound pressure level : under80 dB.

H. SAFETY DEVICE:

Interlock switch on cutting area as soon as the cover of cutting area is open, machine will stop at once witch the function of this switch. Do not remove this switch from machine for any reason, and check its function frequently.

3.SPECIFICATION

<table>
<tr><td colspan="3">MOTOR</td><td colspan="2">2HP(KW1.5)</td></tr>
<tr><td colspan="2" rowspan="2">Saw Blade Speed</td><td rowspan="2">Variable Speed</td><td>Mt/min</td><td>60HZ/29-115, 50HZ/24-95</td></tr>
<tr><td>Ft/min</td><td>60HZ/95-380, 50HZ/79-316</td></tr>
<tr><td colspan="3">Blade Size(mm)</td><td colspan="2">27x0.9x3810</td></tr>
<tr><td colspan="3">Dimension LxWxH (mm)</td><td colspan="2">2030x1315x1425</td></tr>
<tr><td rowspan="3">Packing</td><td colspan="2">N.W / G.W (kgs)</td><td colspan="2">550 / 600</td></tr>
<tr><td colspan="2">Measurement</td><td colspan="2">2286x1600x1727</td></tr>
<tr><td colspan="2">Sets per 20' CTNR</td><td colspan="2">6 sets</td></tr>
<tr><td rowspan="6">Cutting Capacity</td><td rowspan="2">0°</td><td>○(mm/inch)</td><td colspan="2">330 / 13 "</td></tr>
<tr><td>□(mm/inch)</td><td colspan="2">127x483 / 5"x19"</td></tr>
<tr><td rowspan="2">+/- 45°</td><td>○(mm/inch)</td><td colspan="2">305 / 12 "</td></tr>
<tr><td>□(mm/inch)</td><td colspan="2">229x305 / 9"x12"</td></tr>
<tr><td rowspan="2">- 60°</td><td>○(mm/inch)</td><td colspan="2">204 / 8"</td></tr>
<tr><td>□(mm/inch)</td><td colspan="2">178x204 / 7"x8"</td></tr>
</table>

4.FEARTURES:

1. This machine is useful for cutting normal steel, steel pipe, and provides cutting angle at + 60° and -45° by the swivel head.
2. A tooth selection label Ms provided on the machine for cutting reference.
3. Variable speed control gives convenient selection of speeds.
4. Hydraulic cylinder controls feeding volume and provides stable cutting.
5. Easy sliding the working table back and forth by loosing and fixing only two bolts.
6. Quick positioning vise for clamping all sizes of work piece.
7. Chip pan underneath the working table prevents coolant fluid leaking and keep floor dry.
8. Hydraulic unit is to rise up the saw arm automatically for easy handling.
9. Coolant for cutting:water:oil=1:40 oil specification.

5.TRANSPORTATATION & INSTALLATION:

5-1.Unpacking

1. **Transportation to desired location before unpacking, please use-lifting jack. (Fig. B)**
2. **Transportation after unpacking, please use heavy duty fiber belt to lift up the machine.**

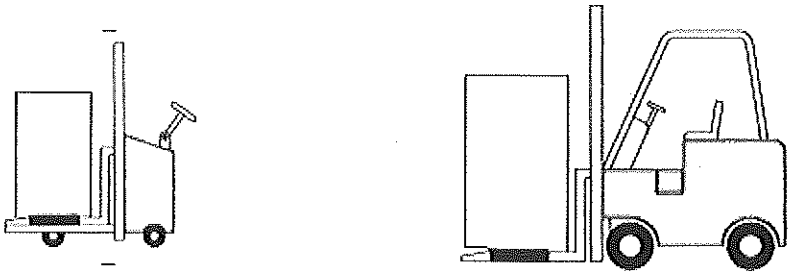

Fig. B

ALLWAYS KEEP PROPER FOOTING & BALANCE WHILE MOVING THIS MACHINE.

5-2.TRANSPORTATION OF MACHINE:

As this machine weights 550kgs(1210lbs) it is recommended that the machine be transported with help of lifting jack.

Transportation Recommendation:

1. **Tighten** all locks before operation.
2. **Always** keep proper footing & balance while moving this machine, and only use a heavy duty of fiber belt to lift the machine as per Fig. 1.
3. **TURN OFF** the power before wiring & be sure machine is properly grounded. Overload & circuit breaker are recommended for safety wiring.
4. **Tighten** 4 bolts to base holes after machine is balanced.
5. **Check** carefully if the saw blade is running in counter-clockwise direction if not, reverse the wiring per circuit diagram, then repeat the running test.
6. **Keep** machine always out from sun, dust, wet, or raining area.

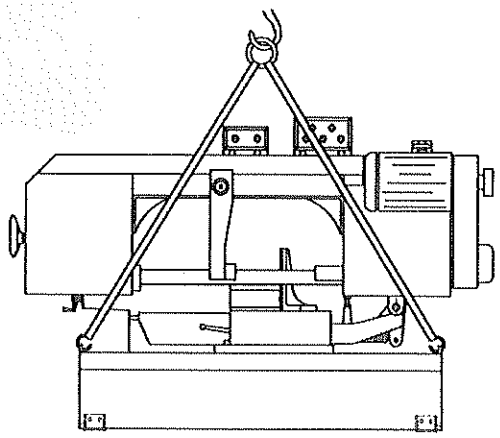

Fig. 1

5-3.Installation:

(1) **Always** Keep proper footing & balance while moving this 470kgs machine. And only use heavy-duty fiber belt to lift the machine as per Fig. (A).

(2) Hang the machine up, away from the floor, take away the 4 pads and assemble them on the auxiliary stand. Fix the machine on the auxiliary stand and lock the connection nut.

(3) **Finish** removing this wooden case/crate from the machine. Unbolt the machine from the crate bottom.

(4) **Position** & tighten 4 bolts into base holes properly after machine in balance.

(5) **Turn off** the power before wiring & be sure machine is in proper grounding. Overload & circuit breaker is recommended for

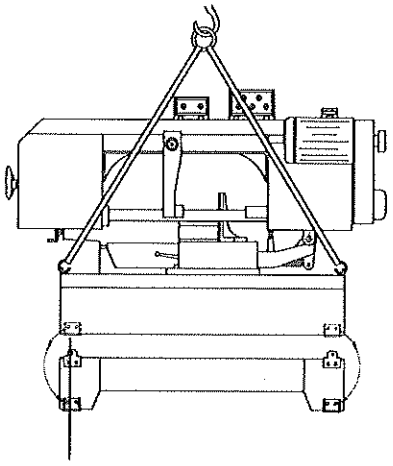

B **Fig. A**

safety wiring.

(6) **Keep** machine always out from sun, dust, wet, raining area.

5-4.CLEAIG & LURICATING

(1) Your machine has been coated with a heavy grease to protect it in shipping. This coating should be completely removed before operating the machine. Commercial degreaser, kerosene or similar solvent may be used to remove the grease from the machine, but avoid getting solvent on belts or other rubber parts.

(2) After cleaning, coat all bright work with a light lubricant. Lubricate all points in Fig 1. with a medium consistency machine oil.

6.MINIMUM ROOM SPACE FOR MACHINE OPERATION

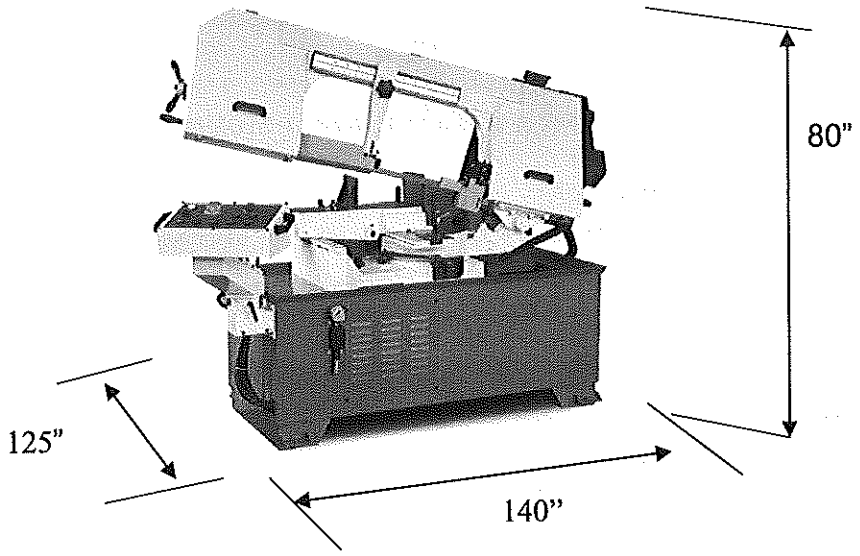

7. MAKE PROPER TOOTH SELECTION

For maximum cutting efficiency and lowest cost per cut, it is important to select the blade with the right number of teeth per inch (TPI) for the material being cut. The material size and shape dictate tooth selection.

TOOTH SELECTION

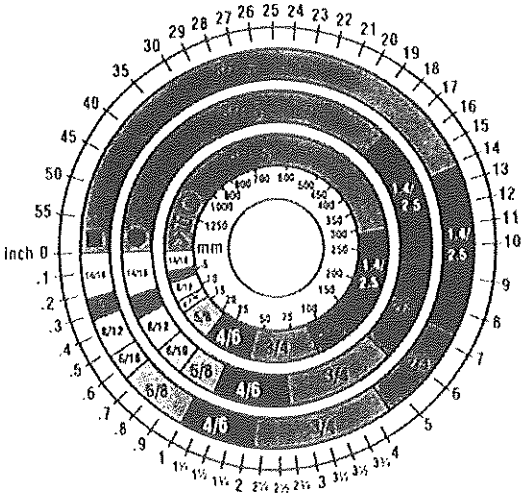

You need to consider:

The width of the cut - That is, the distance in the cut that each tooth must travel from the point it enters the work-piece until it leaves the work-piece, and

1.The shape of the work-piece.

- **Squares, Rectangles, Flats (Symbol : ■)**
  Locate the width of cut on the chart. (Inches on the outer circle and millimeters on the inner circle.) Select the tooth pitch on the ring marked with the square shape which aligns with the width of cut.
  EXAMPLE: 6" (150mm) square, use a 2/3 Vari-Tooth.
- **Round Solids (Symbol : ●)**
  Locate the diameter of your work-piece on the chart. Select the tooth pitch on the ring marked with

the round shape which aligns with the size of stock you are cutting.
EXAMPLE: 4" (100mm) round, use a 3/4 Vari-Tooth.

- **Tubing, Pipe, Structural (Symbol : O H ^)**

Determine the average width of cut by dividing the area of the work-piece by the distance the saw blade must travel to finish the cut. Locate the average width of cut on the chart. Select the tooth Ditch on the ring marked with the tubing and structural shape, which aligns with the average width you are cutting.
EXAMPLE: 4"(100mm) outside diameter, 3"(75mm) inside diameter tubing.

4"(100mm) OD	=12.5 sq.ln. (79cm^2)
3"(75 mm) ID	= 7.0 sq.ln. (44cm^2)
Area	= 5.5 sq.ln. (35cm^2)

5.5 sq.ln. (35cm^2) / 4" (100mm) distance =1.38(35mm) average width
1.38" (35mm), use a 4/6 Vari-Tooth

NOTE: The band speed and cutting rate recommendations presented on this chart are approximations and are to be used as a starting point for most applications. For exact sawing parameters' consult your saw blade supplier.

8. BI-METAL SPEEDS AND FEEDS

These figures are a guide to cutting 4"(100mm) material (with a 314 Vari-Tooth) when using a cutting fluid.
Increase Band Speed: 15% When cutting 1/4"(6.4mm) material (l0/l4 Vari-Tooth)
12% When cutting 3/4"(19 mm) material (6/10 Vari-Tooth)
10% When cutting 1-1/4"(32 mm) material(5/8 Vari-Tooth)
5% When cutting 2-1/2" (64 mm) material(4/6 Vari-Tooth)
Decrease Band Speed: 12% When cutting 8"(200mm) material(2/3 Vari-Tooth)

MATERIAL	ALLOY ASTM NO.	BAND SPEED	
		FT./MIN	M/MIN
Copper Alloy	173,932	314	96
	330,365	284	87
	623,624	264	81
	230,260,272	244	74
	280,264,632,655	244	74
	101,102,110,122,172	234	71
	1751,182,220,510	234	71
	625,706,715,934	234	71
	630	229	70
	811	214	65
Carbon Steel	1117	339	103
	1137	289	88
	1141,1144	279	85
	1141 HI STRESS	279	85
	1030	329	100

Carbon Steel	1008,1015,1020,1025	319	97
	1035	309	94
	1018,1021,1022	299	91
	1026,1513	299	91
	A36(SHAPES),1040	269	82
	1042,1541	249	76
	1044,1045	219	67
	1060	199	61
	1095	184	56
Ni-Cr-Mo Alloy Steel	8615,8620,8622	239	73
	4340,E4340,8630	219	67
	8640	199	61
	E9310	174	53
Tool Steel	A-6	199	61
	A-2	179	55
	A-10	159	49
	D-2	90	27
	H-11,H-12,H-13	189	58
Stainless Steel	420	189	58
	430	149	46
	410,502	140	43
	414	115	35
	431	95	29
	440C	80	24
	304,324	120	36
	304L	115	35
	347	110	33
	316,316L	100	30
	416	189	58

TELLTALE CHIPS

Chips are the best indicators of correct feed force. Monitor chip information and adjust feed accordingly.

Thin or powdered chips – increase feed rate or reduce band speed.

Burned heavy chips – reduce feed rate and/or band speed.

Curly silvery and warm chips – optimum feed rate and band speed.

9.USE OF MAIN MACHINE PARTS

9-1.POWER SYSTEM AND CONTROL PANEL

The electrical rating of your band saw is either with 230 volt-single phase, or 400 volt-3 phase, magnetic control.

If saw arm is in home position and the power is on, the saw arm will be risen up automatically by Hydraulic Unit System when turn on the Hydraulic Unit System button.

The saw arm rising will be stopped when touching the Upper Limit Switch or pushing the Emergency Switch button.

Before connecting your machine to an electrical power system, be sure the motor shaft is running in the correct direction.

We recommend that 1.5mm² fused with a 10 amp, dual element, time lag fuse, to be used to supply power to all machines regardless of their electrical rating.

Refer to the electrical wiring diagram supplied with your machine for instructions on how to connect saw to power source. Power must be cut off when wheel cover is opened or during repairing.

Please check the moving direction of the blade. If the blade is moving in the wrong direction, please re-connect the wire.

9-2.STARTING AND STOPPING MACHINE

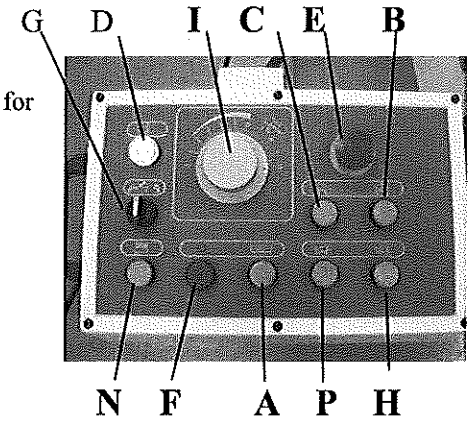

330NAA

1. Light (D) will be on when power is connected. Push the button (N) for start Hydraulic system.
2. Push the button (C) for raising up the saw arm away from the saw table. If saw arm can not be raised, please check if the power is properly wired.
3. Start the motor by pushing the start button (A), Turn (G) (0-close,1-open) to open the coolant system when saw blade is closing work piece. When the cut is completed, turn off the coolant system (G)
4. Bottom (P) is for Hydraulic Vise Clamp. Push bottom(P)will clamp the work object.
5. Bottom (H) is for Hydraulic Vise Release. Push bottom (H)will release the working object.

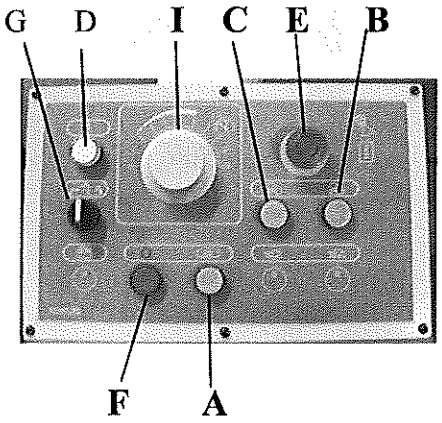

330NA

**For 330NA machine with dc motor only **

The speed button needs to reset if the electric power ever shut off. Before pushing start button, please turn the speed button (I) back to "0" and then, reset the blade speed by turning speed button.

4. Check if the upper limit switch is in proper position.
5. Push button (B) for controlling downwards of saw arm. And control the downward speed by adjusting hydraulic volume valve.
6. When motor is running, push button (B), saw arm will automatically go down and start cutting the work piece. When the cutting is finished, saw arm will rise up itself. The motor will stop when saw arm touching the upper limit switch. Push button (F) to stop the machine, if needed.
7. When discontinued cutting or reset cutting is necessary during operation, close the cylinder feeding valve, then push the stop button (F)

8. When discontinued cutting or reset cutting is necessary during operation, close the cylinder feeding valve, then push the stop button (F)

9. Press emergency button (E) to shut-off the motor when in emergent situation. Before next operation, release (E) to get power.

10. An automatic shut-off limit switch is provided to stop the motor when the cut is completed. The limit switch (K) is controlled by button (L)(figure 3), which contacts the rear arm (M) for shutting off the motor and coolant system.

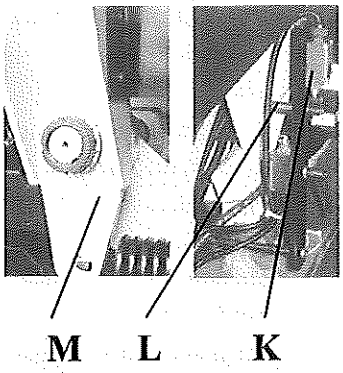

Fig. 3

9-3.ADJUSTING DOWNWARD TRAVEL OF SAW ARM

The downward travel of the saw arm should be adjusted so that when the saw arm is in the extreme downward position, the teeth of the blade will not touch the table surface. The stop screw (A) (Fig.4) is used to adjust the distance between blade and table surface. After the distance is adjusted, tighten lock nut.

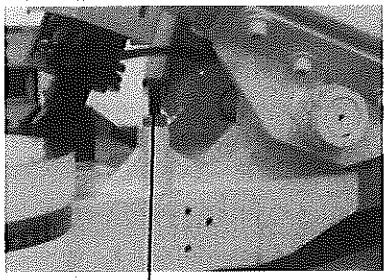

Fig.4

9-4.CHANGING SPEEDS AND ADJUSTING BELT TENSION

If the belt (B) (Fig 6) is too loose, Loosen screw nut (A)(Fig5) adjust the screw to proper tension and lock the screw nut.

The cutting speed is controlled by speed change C (Fig 6). Turn it clockwise to decrease the cutting speed and increase the cutting speed by turning counter-clockwise.

Change speed always when motor is running, and be sure the belt cover is always in locked position.

**For 330D machine with dc motor only **

When motor is running, you can see the blade speed (D) on Operation Control Box. Just changing the blade speed by turning Blade Speed Button (E).

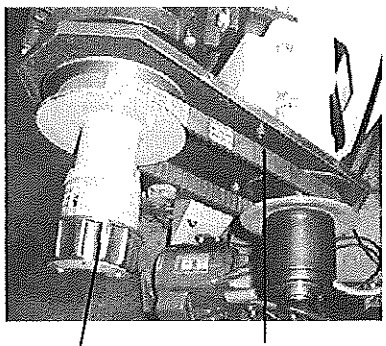

Fig.6

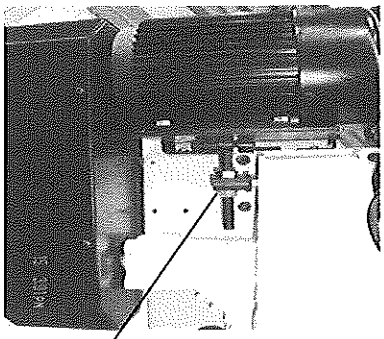

Fig.5

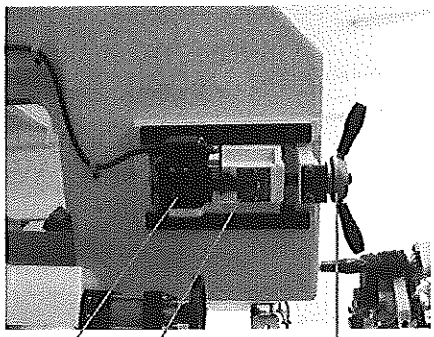

Fig.7

9-5.ADJUSTING BLADE TENSION AND BLADE TRACKING

To tension the blade, turn the blade tension handle (A) (fig. 7) clockwise. A pointer and tension scale (B) is located underneath the wheel. The scale is graduated to indicate blade tension of 20,000, 30.000 and 35,000 pounds per square inch (psi). For carbon blades, the blade should be tensioned at 20,000 psi. For bi-metal blades (similar to the one supplied with the machine), the blade should be tensioned at 30,000 or 35,000 psi. Always release blade tension at the end of each working day to prolong blade life. Make sure the blade is tensioned correctly before checking or adjusting tracking. The blade is tracking properly when the back of the blade is just lightly touching the wheel flanges of both wheels while the machine is running. If the blade is not touching the wheel flanges, tighten or loosen screw C (fig. 7) until the blade tracks properly.

9-6.ADJUSTING CUTTING WIDTH

First loosen clamp knob (A) (fig. 8). Move the left blade guide bar to the suitable position. Then tighten clamp knob (A).

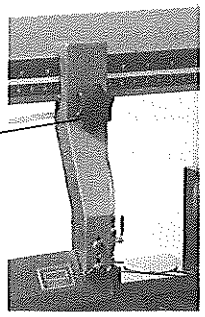

Fig.8

9-7.ADJUSTING BLADE GUIDE ROLLER BEARINGS, CARBIDE BLADE GUIDES AND BACK-UP BEARINGS AND CLEARING THE CUTTING CHIP

Before making the following adjustments, make sure the blade is tracking and tensioned properly:

1. The back of the blade (A) (fig. 9) should ride against the back-up bearing (B). To adjust, loosen set screw (C) and move the guide block (D) up or down, until it lightly touches the back of the blade.

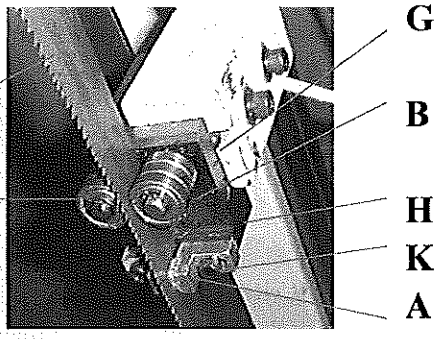

Fig.9

2. The saw blade (A) should also ride between and lightly touch the two blade guide roller bearings (E) and (F) (fig. 9)

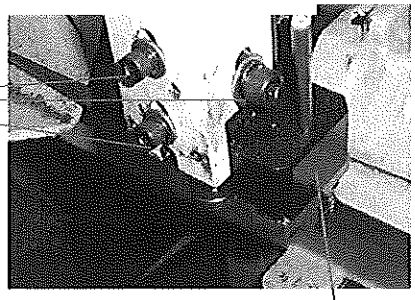

Fig.10

The front bearing (E) (fig. 9) is mounted on an eccentric, and can easily be adjusted to suit blade thickness by loosening set screw (G) and turning shaft (E).

3. The carbide blade guides (H) (fig 9) should also be adjusted so they lightly touch the blade by loosening screw (K).
4. The blade guide roller bearings, carbide guides and backup bearing on holder (fig 9 and 10) should be adjusted in the same manner.
5. Cutting chips on the blade will be cleared by the steel brush.

9-8.CLEARING THE CUTTTNG CHIP

Please use steel brush to clear the chip on the blade teeth (fig 11)

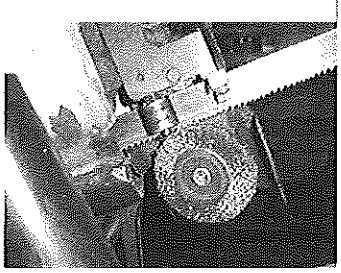

Fig.11

9-9.BLADE AND COOLING SYSTEM

The use of proper cutting fluid is essential to obtain maximum efficiency from a band saw blade. The main cause of tooth failure is excessive heat build-up. This is the reason that cutting fluid is necessary for long blade life and high cutting rates. cutting area and blade wheels should be kept clean at all time.

The rate of coolant flow is controlled by the stop valve lever (A) (fig 12), which directs the coolant onto the blade. The lever (A) is shown in the off position.

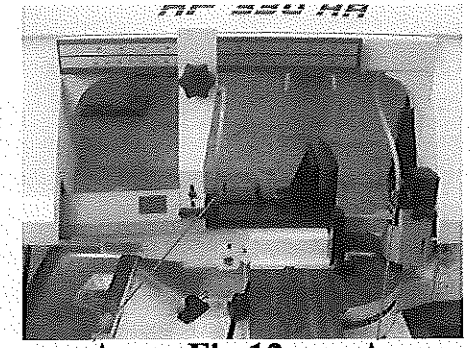

A Fig.12 A

9-10.OPERATING AND ADJUSTING VISE

The work-piece is placed between the vise jaws with the amount to be cut-off extending out past the blade. Your machine is equipped with a "quick action" Vise jaw which allows you to instantly position the moveable vise jaw (B) (fig, 14). Simply turn hand-wheel (A) counterclockwise 1/2 turn and move the vise jaw(B) to the desired position. Pull away the rack hook (C) to move the vise jaw (B). Then tighten the vise jaw (B) against the work-piece by turning hand-wheel clockwise. When it is not lockable the work piece by turning the hand wheel (A) in clockwise direction, turn the hand wheel (A) in counter-clockwise direction then and turn clockwise again the wheel to lock firmly the work piece.

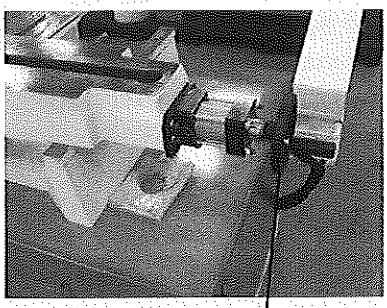

Fig.13 A

If the same cutting length can be used repeatedly on many work-pieces, distance set rod can he used to set a fix cutting length. Proceed as follows:

1. Pull the distance set rod (H) (fig 15) to a desired position. Loosen the fix screw. (K)
2. Let the top of the work-piece touch the distance set rod. Lock firmly the fix screw.(K)
3. Tighten vise jaw the fix the work-piece and get the same cutting length.

B C Fig.14

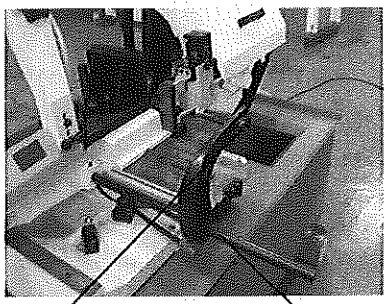

K Fig.15 H

9-11.VARIABLE CUTTING ANGLE SELECTION

Please proceed as follows to obtain desired cutting angle. The swivel range is from 60°clockwise to 45 °counter-clockwise.

Before swinging the base, make sure there is nothing in the way, or any interference.

1. Pull out the bar (B) (fig. 16) swing and hold the bar.
2. Push to turn the swivel base to desired angle. Refer to scale on (D) for degree.
3. then start the cutting.

The swivel range is from 60°clockwise to 45° counter-clockwise.

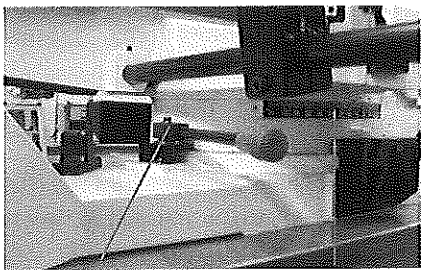

B Fig.16 D

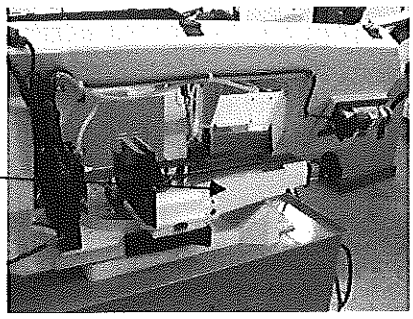

Fig.17 C

For front or rear cutting, move the sliding vise table by direct pushing. Be sure to put your hand ahead of (C) to prevent the contact with the pumper.

***330NA Fig 18 turning the handle(A) and make the vise(C) to clamp working object,make the working object being clamped tied. The object will not be moving during the cutting and cause any danger. After cutting completed, release vise(C) and take the object from the working table

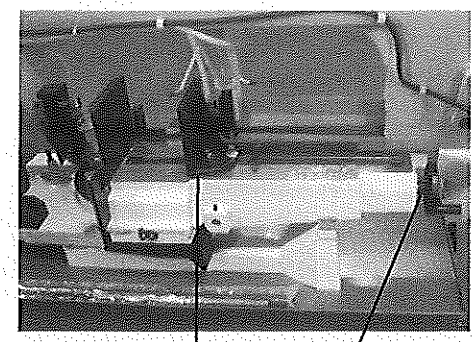

Fig.18 C A

***330NAA Fig 18.1 is the Hydraulic Vise set. The hydraulic (B) movement is: turning the handle(A) and make the vise(C) to clamp working object, and push the bottom of Hydraulic Vise Clamp. The hydraulic device will move the vise and press the working object, make the working object being clamped tied. The object will not be moving during the cutting and cause any danger. After cutting completed, push the release bottom and take the object from the working table

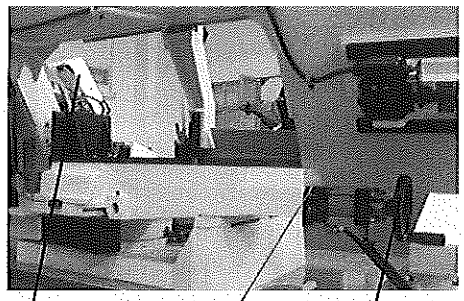

Fig.18 C B A

9-12.REMOVING AND INSTALLING THE BLADE

When it is necessary to replace the blade, proceed as follows:

1. Raise the saw frame about 6" and close the feed on/off knob by turning it clockwise as far as it will go (fig 19).
2. Move the blade guide arm to the right.
3. Disconnect the machine from the power source. Loosen cover screw, remove cover (A), open the cover (B), remove cover (C) and (D), then clean the chips and dirt inside the machine.

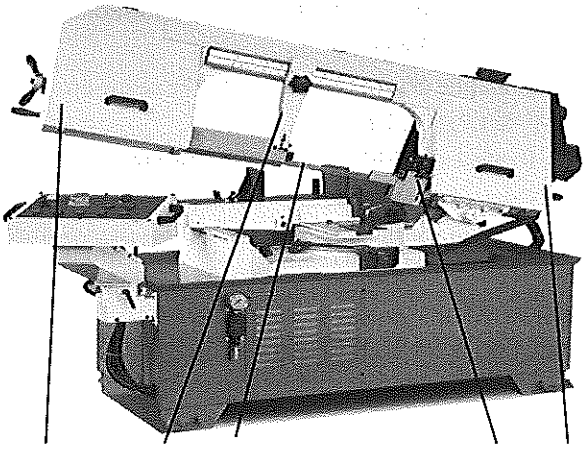

B E D Fig.19 C A

3. Release blade tension (F) (fig 20) by turning the blade tension hand-wheel counterclockwise.
5. Remove the blade from both wheels and out of each blade guide. But remove side (B) saw blade. When totally released, then remove the side (A).
6. Make sure the teeth of the new blade are pointing in the right direction. IF necessary, turn the blade inside out.
7. Place the new blade on the wheels. In the blade guides and adjust blade tension and blade guides.

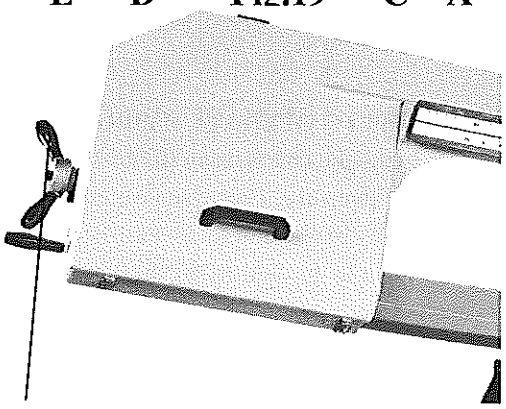

F Fig.20

9-13.HYDRAULIC SYSTEM (OPTIONAL FOR 1PH 330NAA)

A). The hydraulic system on this machine consists of a hydraulic cylinder, which is operated by a needle valve. The saw frame is to be automatically raised up by the hydraulic movement, and as this is done, oil passes to the underside of the piston. The restricted flow is regulated by the feed rate control knob and governs the speed the saw frame lowers If turn the valve (D) (fig 21) clockwise, the descending speed of the saw frame will decrease If turn the valve counterclockwise, the descending speed of the saw frame will increase. Bottom (E) is for Hydraulic Vise Clamp. Push bottom (E) will clamp the work object. Bottom (G) is for Hydraulic Vise Release. Push bottom (G)will release the working object.

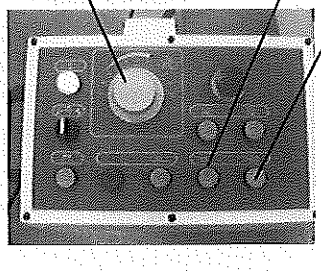

Fig.21

9-14.GEAR BOX

The gearbox should be drained and refilled after the first 50 hours of use and thereafter every 5 months, with Mobil Synthetic Gear Oil, SHC-636, ISO Viscosity Grade 680. This oil meets or exceeds American Gear Manufacturers Association (AG.M.A.) #8 compounded Cylinder Oil specifications. This oil is available through Grainger's in 1 quart bottles as number SW061.

To change the gear oil, proceed as follows:

1. Run the machine for 10 minutes to warm up the gearbox.
2. Disconnect the machine from the power source.
3. Raise the saw arm to its maximum position and close the feed rate control knob.
4. Drain the gearbox by removing the screw away from the oil-out hole (A) (fig. 22).
5. Replace a screw and lower the saw arm to its lowest position.
6. Open the oil-in hole and fill the gearbox with oil
7. Close the oil-in hole.

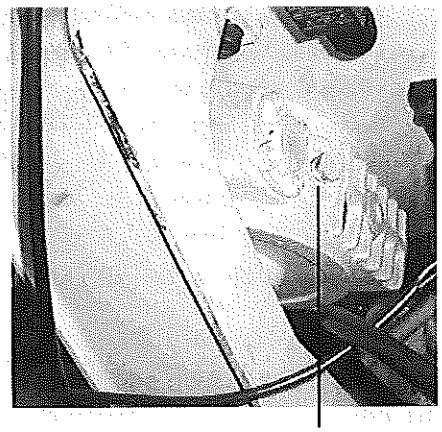

Fig.22

9-15.PIVOT

Occasionally lubricate the pivot using waterproof grease at the fitting (C) (fig 23)

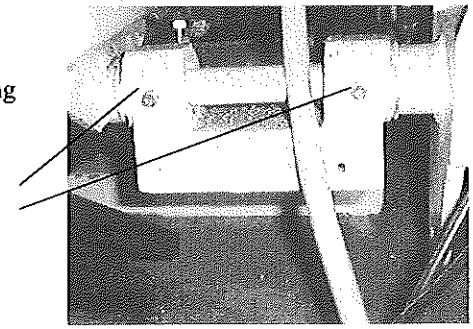

Fig.23

9-16. HOW TO OPERATE HYDRAULIC UNIT (FOR 330A)

1. This hydraulic unit is using (Esso,H15) oil. Change first oil after 50 hours use. Then change oil every 6 months after. Run the hydraulic unit for at least 10 minutes before changing oil, this will let the oil flow smoother and easier to change.
2. Open the oil outpour door with tool when changing the oil. Let the used oil out completely. Close the outpour door firmly, open the input door (A) and pour in the oil by 3 liter (will be 80%full).
3. If in long time use, please watch out the oil temperature to

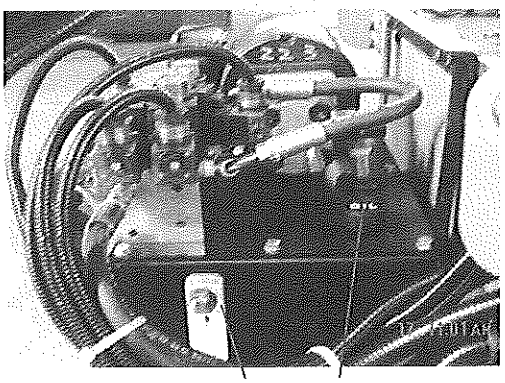

Fig.24

be 60° C maximum.

9-17. HOW TO USING CLEAN EQUIPMENT

After finished cutting, you can clean the chip by using clean equipment.

Adjust the screw (A) (on the end of spray) to control the volume of coolant fluid.

NOTICE : Please using the suitable volume of coolant fluid for cleaning.

Cleaning the floor immediately when the coolant fluid leaking on the floor.

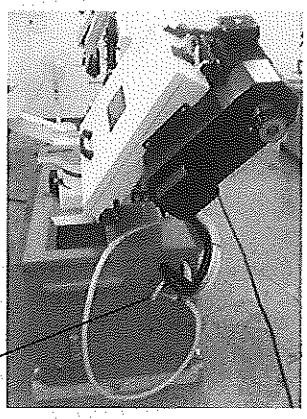

Fig. 25 A

Always keep the floor dry to prevent slip or any accident.

10.MAINTAINING

That's easier to keep machine in good condition or best performance by means of maintaining it at any time than remedy it after it is out of order.

(1) Daily Maintenance (by operator)

(a) Fill the lubricant before starting machine everyday.

(b) If the temperature of spindle caused over-heating or strange noise, stop machine immediately to cheek it for keeping accurate performance.

(c) Keep work area clean; release vise, cutter, work-piece from table; switch off power source; take chip or dust away from machine and follow instructions lubrication or coating rust proof oil before leaving.

(2) Weekly Maintenance

(a) Clean and coat the cross leading screw with oil.

(b) Check to see if sliding surface and turning parts lack of lubricant. If tile lubricant is insufficient, fill it.

(3) Monthly Maintenance

(a) Check if the fixed portion has been loose.

(b) Lubricate bearing worm, and worm shaft to avoid the wearing.

(4) Yearly Maintenance

(a) Adjust table to horizontal position for maintenance of accuracy.

(b) Check electric cord, plugs, switch, at least once a year to avoid loosening or wearing.

11. TROUBLE SHOOTING

Symptom	Possible Cause(s)	Corrective Action
Machine can not be started	1. Power is not plugged; the power light on control panel is not on. 2. Motor can not be started; power was cut by limit switch. 3. Operation button can not be normally operated.	1. Check the motor specification; connect the power with correct power supply. Make sure the power light in on. 2. Make sure the cover is in correct position. 3. Push the emergency button; return it to original position. Then release the emergency button.
Excessive Blade Breakage	1. Materials loosen in vise. 2. Incorrect speed or feed 3.Blade teeth spacing too large	1. Clamp work securely 2. Adjust speed or feed 3. Replace with a small teeth spacing

		blade
	4. Material too coarse	4. Use a blade of slow speed and small teeth spacing
	6. Incorrect blade tension	5. Adjust to where blade just does not slip on wheel
	7.Teeth in contact with material before saw is started	6. Place blade in contact with work after motor is starred
		7. Adjust wheel alignment
	8. Blade rubs on wheel flange	8. Adjust guide bearings
	9. Miss-aligned guide bearings	9. Use thinner blade
	10. Blade too thick	10. Weld again, beware the welding skill.
	11.Cracking at weld	
Premature Blade Dulling	1. Teeth too coarse	1. Use finer teeth
	2. Too much speed	2. Decrease speed
	3. Inadequate feed pressure	3. Decrease spring tension on side of saw
	4.Hard spots or scale on material	4. Reduce speed, increase feed pressure
	5. Work hardening of material.	5. Increase feed pressure by reducing spring tension
	6.Blade twist	6. Replace with a new blade, and adjust blade tension
	7. Insufficient blade	7. Tighten blade tension adjustable knob
	8. Blade slide	8. Tighten blade tension
Unusual Wear on Side/Back of Blade	1. Blade guides worn.	1. Replace.
	2. Blade guide bearings not adjust properly	2. Adjust as per operators manual
	3. Blade guide bearing bracket is loose	3. Tighten.
Teeth Ripping from Blade.	1. Tooth too coarse for work	1. Use finer tooth blade.
	2. Too heavy pressure; too slow speed.	2. Decrease pressure, increase speed
	3. Vibrating work-piece.	3. Clamp work piece securely
	4. Gullets loading	4. Use coarser tooth blade or brush to remove chips.
Motor running too hot	1. Blade tension too high.	1. Reduce tension on blade.
	2. Drive belt tension too high.	2. Reduce tension on drive belt.
	3. Blade is too coarse for work	3. Use finer blade.
	4. Blade is too fine for work	4. Use coarse blade.
	5. Gears aligned improperly	5. Adjust gears so that worm is in center of gear.
	6. Gears need lubrication	6. Check oil path.
	7. Cut is binding blade	7. Decrease reed anti speed
Bad Cuts (Crooked)	1. Feed pressure too great.	1. Reduce pressure by increasing spring tension on side of saw
	2. Guide bearings not adjusted properly	2. Adjust guide bearing, the clearance can not greater than 0.001.
	3. Inadequate blade tension.	3. Increase blade tension by adjust blade tension
		4. Replace blade

	4. Dull blade. 5. Speed incorrect. 6. Blade guides spaced out too much 7. Blade guide assembly loose 8. Blade truck too far away from wheel flanges	5. Adjust speed 6. Adjust guide space. 7. Tighten 8. Re-track blade according to operating instructions.
Bad Cuts (Rough)	1. Too much speed or feed 2. Blade is too coarse 3. Blade tension loose	1. Decrease speed or feed. 2. Replace with finer blade. 3. Adjust blade tension.
Blade is twisting	1. Cut is binding blade. 2. Too much blade tension	1. Decrease reed pressure. 2. Decrease blade tension.
Saw arm can not be raised up after pushing the raising button	1.Improper setting of depth gauge	1. Press the emergency stop Button and RESET. 2. Check the upper limit switch and stop round Position. Make sure the limit switc is always underneath the stop roun bar. 3. Check the oil gauge ; make sure the oil is in proper range. 4. Check the motor revolution direction; make sure the motor revolution is in clock-wise direction.

12. CIRCUIT DIAGRAM

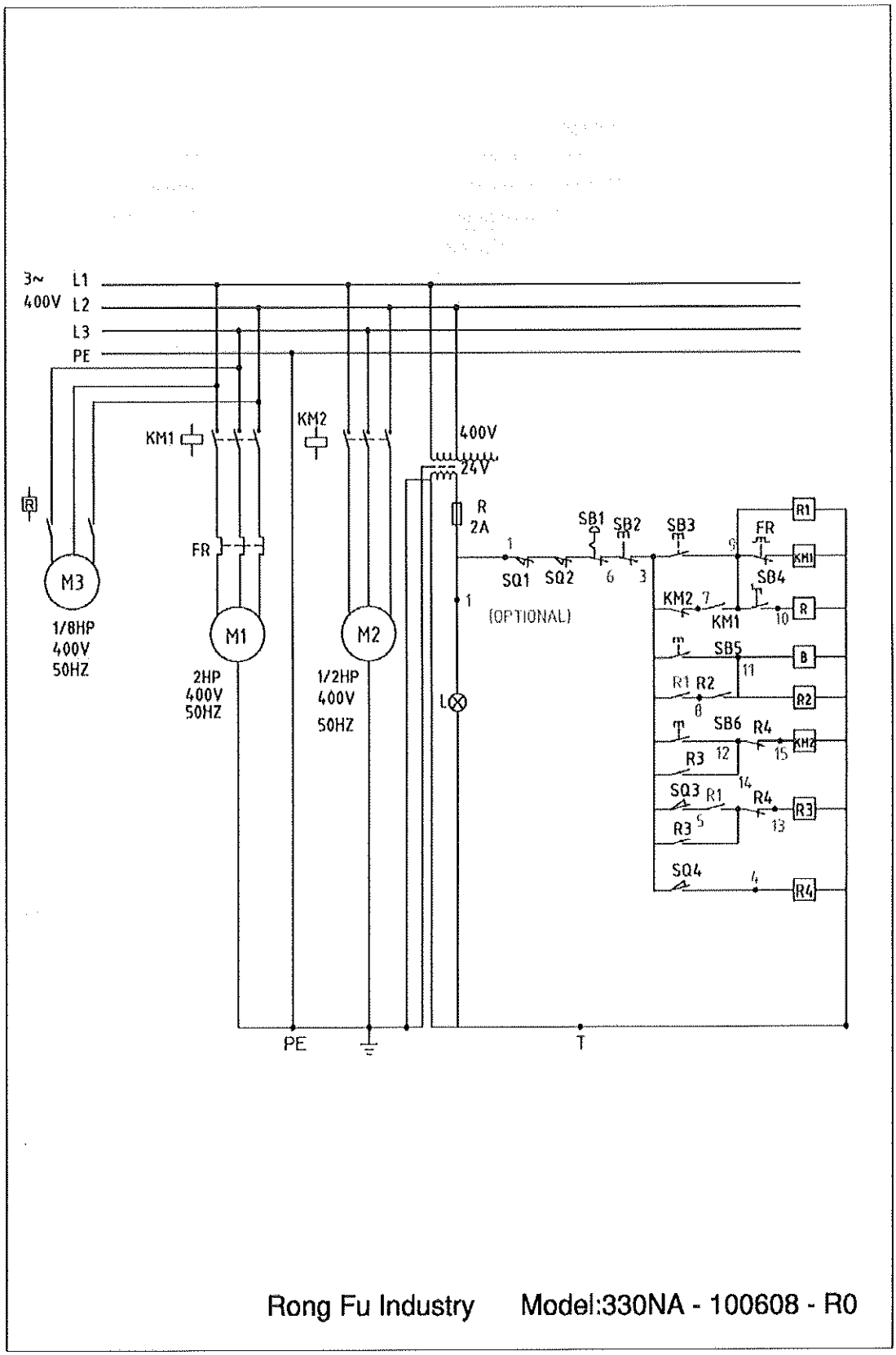

330NA	SCHEDULE OF ELECTRICAL EQUIPMENT				
Item.	Designation and function	Technical data	QTY	Supplier reference	Remark
SQ1	LIMIT SWITCH	OPTION			
SQ2	LIMIT SWITCH	OPTION	1		
SQ3	LIMIT SWITCH		1		
SQ4	LIMIT SWITCH		1		
SB1	EMERGENCY SWITCH		1		
SB2	OFF SWITCH		1		
SB3	START SWITCH		1		
SB4	SELECTING SWITCH		1		
SB5	DOWN SWITCH		1		
SB6	UP SWITCH		1		
KM1	MEGNETIC SWITCH		1		
KM2	MEGNETIC SWITCH		1		
R	PUMP RELAY		1		
R1	CONTROL RELAY		1		
R2	CONTROL RELAY		1		
R3	CONTROL RELAY		1		
R4	CONTROL RELAY		1		
B	DC ELECTRIC VALVE		1		
L	LIGHT		1		
TR	TRANSFORMER		1		
M1	MOTOR		1		
M2	OIR MOTOR		1		
M3	COOL PUMP		1		
FU	FUSE		1		
FR	OVER LOAD		1		
			1		
			1		
			1		

Rong Fu Industry Model:330NA - 100608 - R0

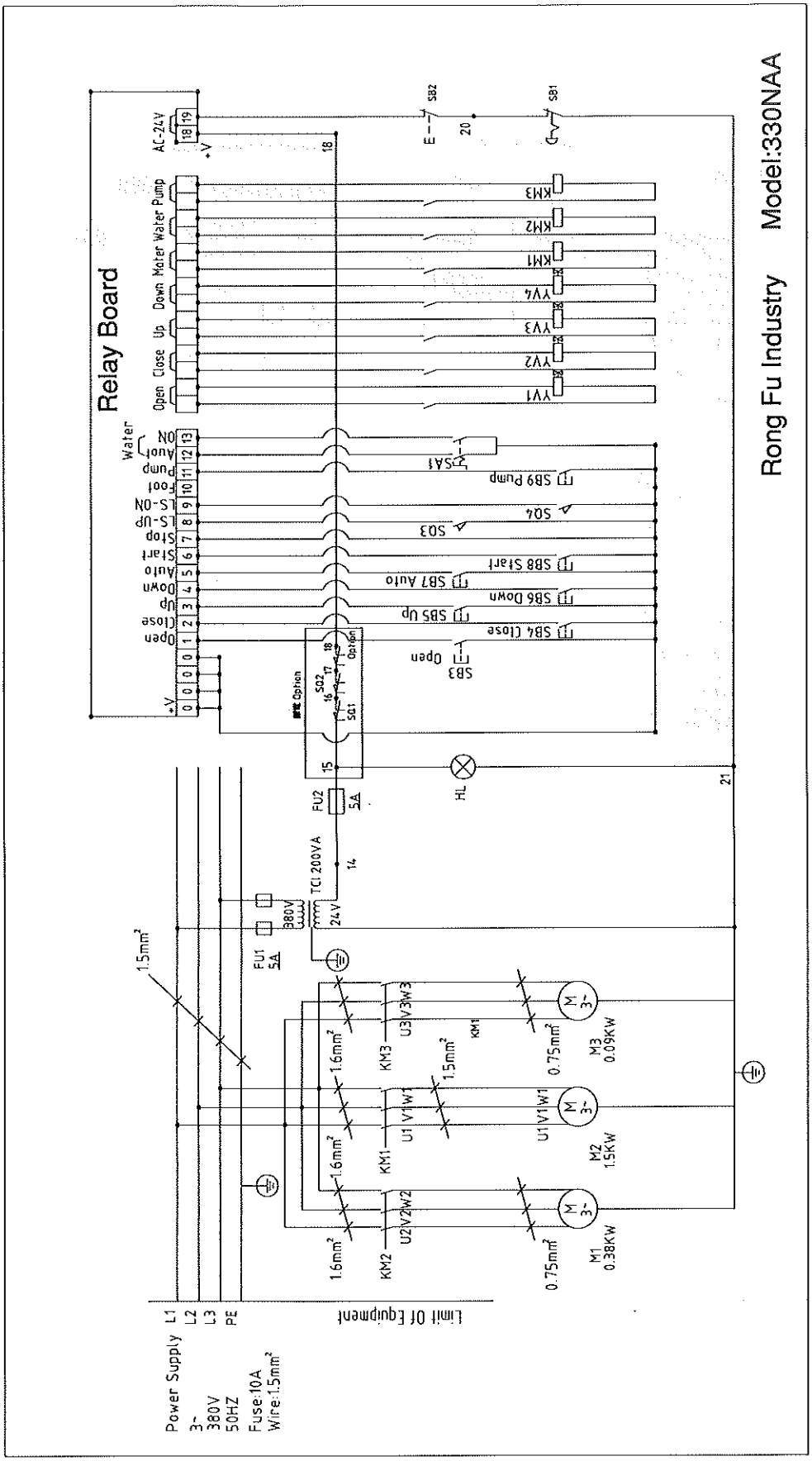
Rong Fu Industry
Model:330NAA
Relay Board
Open
Close
Up
Down
Water Pump
KM3
KM2
KM1
YV4
YV3
YV2
YV1
SB2
SB1
SA1
SB9 Pump
SQ4
SQ3
SB8 Start
SB7 Auto
SB6 Down
SB5 Up
SB4 Close
SB3 Open
HL
FU2 5A
FU1 5A
TC1 200VA
380V
24V
1.5mm²
1.6mm²
0.75mm²
M1 0.38KW
M2 1.5KW
M3 0.09KW
Limit Of Equipment
Power Supply
3~
380V
50HZ
Fuse:10A
Wire:1.5mm²

330NAA	SCHEDULE OF ELECTRICAL EQUIPMENT				
Item.	Designation and function	Technical data	QTY	Supplier reference	Remark
SA1	Wster-Auto-SemiAuto Switch	NSS22-S-2A	1	NHD	R50105813
KM1	Main Motor Contactor	GMC(D)-9M	1	LG	
KM2	Oil Motor Contactor	GMC(D)-9M	1	LG	
KM3	Pump Contactor	GMC(D)-9M	1	LG	
FU1	Fuse 5A	ASK2 500V 6.3A	2	Klemson	IEC60947-7-3
FU2	Fuse 5A	ASK2 500V 6.3A	1	Klemson	IEC60947-7-3
TC1	Transformer	0,380/0,24V/200VA	1	LCE	SGS TUV
YV1	Vice Valve ON		1		
YV2	Vice Valve OFF		1		
YV3	Up Valve		1		
YV4	Pown Valve		1		
HL	Singal	NLD-22	1	NHD	R50105813
SB1	Emergency Stop Switch		1	KD	HY57B
SB2	OFF Switch	HY57B E195428	1	NHD	R50009059
SB3	Vice ON Switch	NPB22-F10G	1	NHD	R50105813
SB4	Vice OFF Switch	NPB22-F10R	1	NHD	R50105813
SB5	UP Switch	NPB22-F10G	1	NHD	R50105813
SB6	Down Switch	NPB22-F10G	1	NHD	R50105813
SB7	Auto Mode	NSS22-S-1A	1	NHD	R50105813
SB8	Motor Start Switch	NPB22-F10G	1	NHD	R50105813
SB9	Oil Pump Switch	NPB22-F10G	1	NHD	R50105813
SQ1	Limit Switch	AZD-1122	1	Shinozaki	VDE
SQ2	Limit Switch	AZD-1122	1	Shinozaki	VDE
SQ3	Lower Limit Switch	AZD-1112	1	Shinozaki	VDE
SQ4	Upper Limit Switch	AZD-1112	1	Shinozaki	VDE
M1	Motor	2HP/380V/50HZ/3PH	1	JIUH DAH	
M2	Oil Motor	1/2HP/380V/50HZ/3PH	1	JIUH DAH	
M3	Water Motor	1/8HP/380V/50HZ/3PH	1	JIUH DAH	

Rong Fu Industry Model:330NAA

RF-330NAA-091224-R0

DIAGRAM

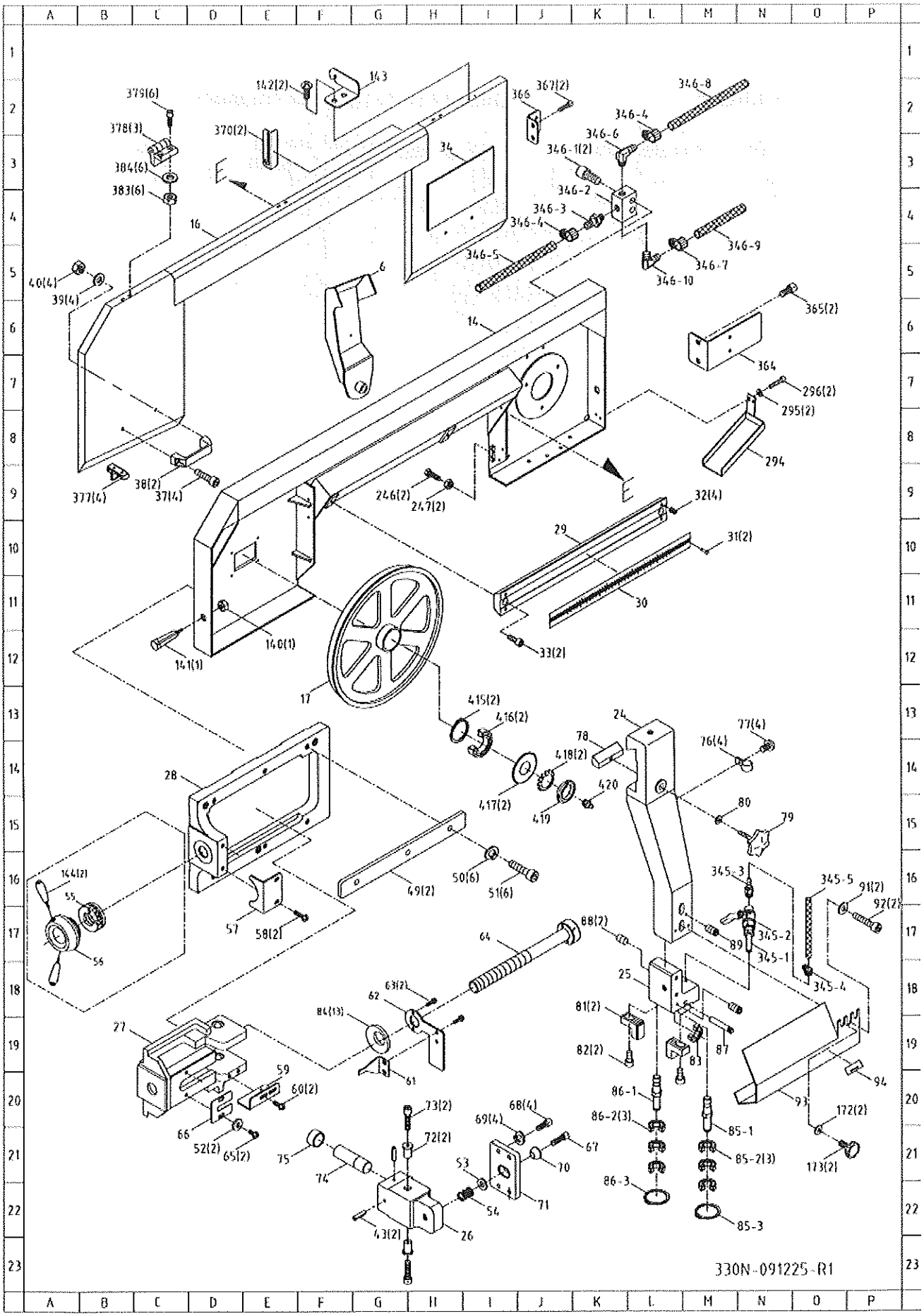
379(6)
378(3)
384(6)
383(6)
142(2)
143
370(2)
34
E
16
40(4)
39(4)
6
366
367(2)
346-8
346-4
346-6
346-1(2)
346-2
346-3
346-4
346-5
346-9
346-7
346-10
365(2)
364
14
296(2)
295(2)
294
377(4)
38(2)
37(4)
246(2)
247(2)
32(4)
29
31(2)
30
33(2)
140(1)
141(1)
17
415(2)
416(2)
417(2)
418(2)
419
420
24
78
77(4)
76(4)
80
79
28
144(2)
55
56
57
58(2)
49(2)
50(6)
51(6)
345-3
345-5
98(2)
97(2)
345-2
89
345-1
345-4
88(2)
64
25
63(2)
62
84(13)
61
81(2)
82(2)
83
87
94
27
59
60(2)
66
52(2)
65(2)
86-1
86-2(3)
85-1
85-2(3)
86-3
85-3
93
172(2)
173(2)
73(2)
72(2)
75
74
68(4)
69(4)
67
70
53
54
71
43(2)
26
330N-091225-R1

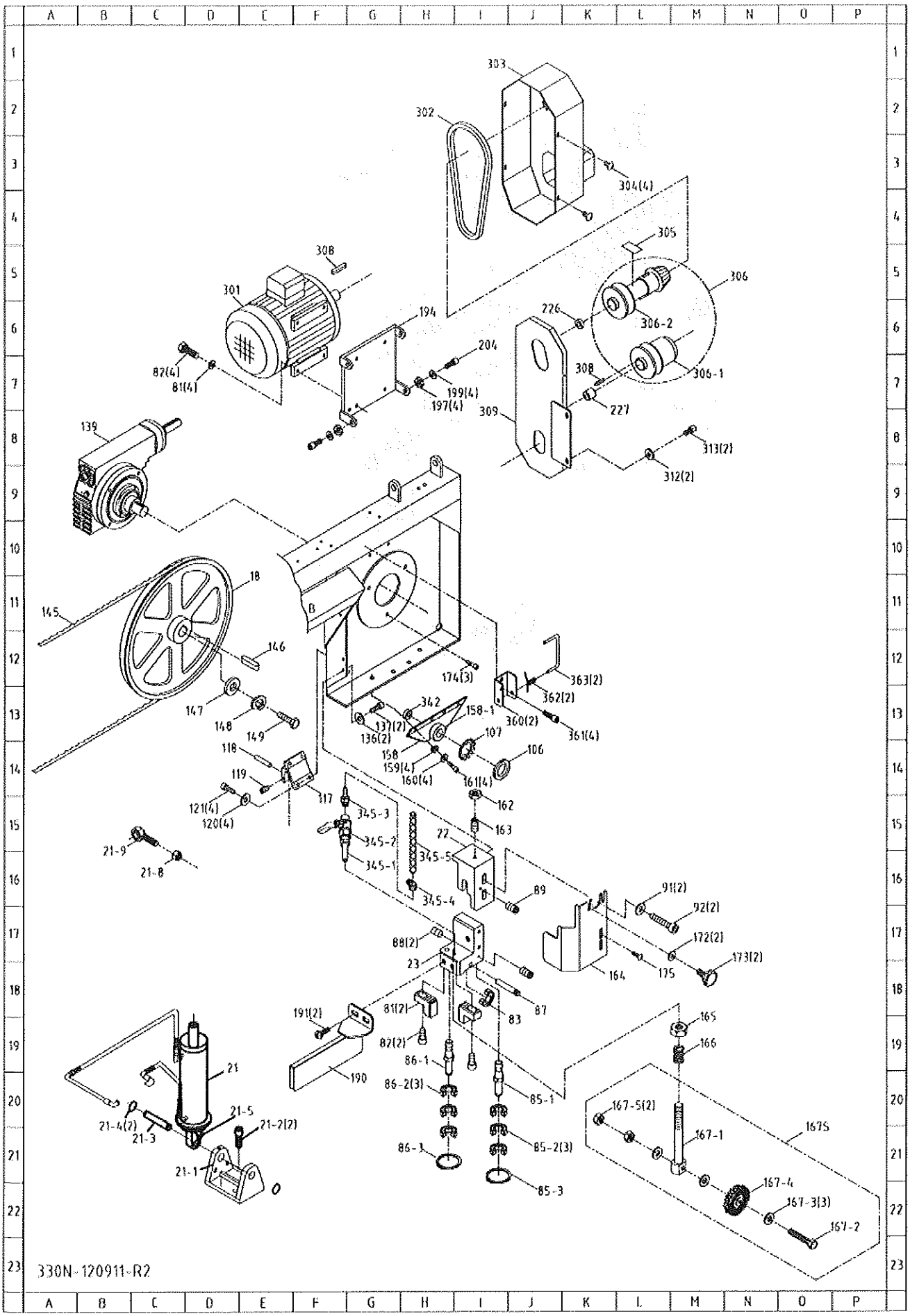
303
302
304(4)
305
306
308
301
194
226
306-2
204
82(4)
81(4)
199(4)
197(4)
308
306-1
227
309
139
313(2)
312(2)
18
145
146
174(3)
363(2)
362(2)
147
148
149
342
158-1
360(2)
361(4)
137(2)
136(2)
107
158
106
159(4)
160(4)
161(4)
118
119
117
162
121(4)
120(4)
345-3
163
345-2
22
345-5
21-9
21-8
345-1
345-4
89
91(2)
92(2)
88(2)
172(2)
23
173(2)
164
175
87
191(2)
81(2)
83
165
82(2)
166
86-1
21
190
86-2(3)
85-1
21-5
21-4(2)
21-2(2)
21-3
167-5(2)
167-1
167S
86-3
85-2(3)
21-1
85-3
167-4
167-3(3)
167-2
330N-120911-R2

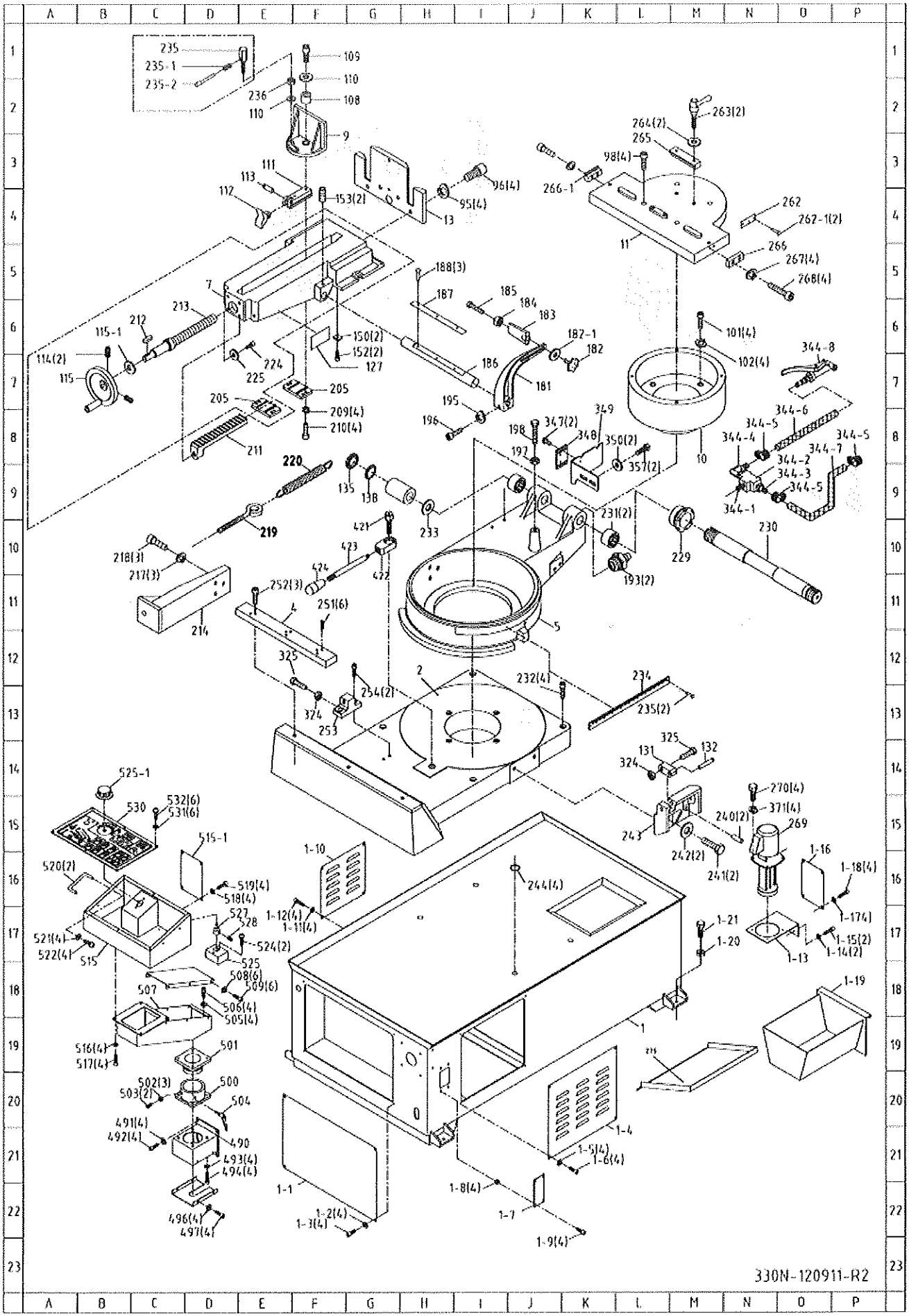
235
235-1
235-2
236
110
109
110
108
9
111
113
112
153(2)
96(4)
95(4)
13
263(2)
264(2)
265
98(4)
266-1
11
262
262-1(2)
266
267(4)
268(4)
188(3)
187
185
184
183
182-1
182
186
181
7
213
212
115-1
114(2)
115
224
225
150(2)
152(2)
127
205
205
209(4)
210(4)
211
195
196
198
347(2)
348
349
350(2)
357(2)
192
101(4)
102(4)
10
344-8
344-6
344-5
344-4
344-2
344-3
344-7
344-1
220
219
135
138
233
218(3)
217(3)
214
421
423
424
422
252(3)
251(6)
4
325
324
253
254(2)
2
232(4)
234
235(2)
231(2)
193(2)
229
230
5
525-1
530
532(6)
531(6)
515-1
520(2)
519(4)
518(4)
527
528
524(2)
525
521(4)
522(4)
515
508(6)
509(6)
507
506(4)
505(4)
516(4)
517(4)
501
502(3)
503(2)
500
504
491(4)
492(4)
490
493(4)
494(4)
496(4)
497(4)
1-10
1-12(4)
1-11(4)
244(4)
325
131
132
324
243
242(2)
241(2)
240(2)
270(4)
271(4)
269
1-16
1-18(4)
1-17(4)
1-21
1-20
1-13
1-15(2)
1-14(2)
1-19
1
1-4
1-5(4)
1-6(4)
1-1
1-3(4)
1-2(4)
1-8(4)
1-7
1-9(4)
330N-120911-R2

Part List

MOLDE:330N

CODE_NO	PART_NO	SPECIFICATION	DESCRIPTION	Material	QTY	NOTE
1	103005K		Stand	SPHC	1.00	
1-1	103005K		Stand Cover(BB)	SPHC	1.00	
1-2	HW004	6.5*13-0.8t (M6)	Washer		4.00	
1-3	HS229	M6x15L	Hex. Socket Head Screw		4.00	
1-4	103005K		Stand Cover(B)	SPHC	1.00	
1-5	HW004	6.5*13-0.8t (M6)	Washer		4.00	
1-6	HS229	M6x15L	Hex. Socket Head Screw		4.00	
1-7	103005K-6		Stand Cover		1.00	
1-8	HW004B	M6	Washer		4.00	
1-9	HS334	M6X12L	Hex. Socket Head Screw		4.00	
1-10	103005K		Stand Cover(A)	SPHC	1.00	
1-11	HW004B	M6	Washer		4.00	
1-12	HS334	M6X12L	Hex. Socket Head Screw		4.00	
1-13	103005K-2		Bracket B		1.00	
1-14	HW004B	M6	Washer		2.00	
1-15	HS334	M6X12L	Hex. Socket Head Screw		2.00	
1-16	103005K		Stand Cover(C)	SPHC	1.00	
1-17	HW004B	M6	Washer		4.00	
1-18	HS334	M6X12L	Hex. Socket Head Screw		4.00	
1-19	103005K-3			SPHC	1.00	
1-20	HN008	M16	Hex. Head Nut		4.00	
1-21	HS123	M16x80L	Hex. Head Screw		4.00	
2	103009		Swivel Arm Base	FC20	1.00	
4	103015		Adjustable Support	FC20	1.00	
5	101029B		Swivel Base(Upper)	FC20	1.00	
6	103045A	1319/330	Rear Pivot Bracket	SS41	1.00	
6-1	105073			S45C	1.00	
7	101035G		Vise Base	FC20	1.00	
9	196208D		Vise Jaw Bracket(Front)	FC15	1.00	
10	101012		Fixed Shaft	FC20	1.00	
11	101036B		Slide Base	FC15	1	
13	101044B		Vise Jaw Bracket(Rear)	FC20	1.00	
14	103041B		Body Frame	SS41	1.00	
16	103138S		Blade Back Cover	SS41	1.00	
17	103024		Idler Wheel Assembly		1.00	
18	103025		Drive Wheel	FC25	1.00	
19	191416		Hex. Head Screw		2.00	
21	105015E	4000mm	Cylinder Assembly		1.00	
21-1	151036		Support Flange	FC25	1.00	
21-2	HS242	M8X20L	Hex. Socket Head Screw		2.00	
21-3	151037		Shaft	S45C	1.00	
21-4	HCS09	S20	C-Retaniner Ring		2.00	
21-5	HD817	1/8"		cu	1.00	

Part List

MOLDE:330N

CODE_NO	PART_NO	SPECIFICATION	DESCRIPTION	Material	QTY	NOTE
22	103032		Arm (Right)	FC15	1.00	
23	103029		Blade Adjustable (Rear)	FC20	1.00	
24	103031		Arm (Left)	FC15	1.00	
25	103030		Bearing Bracket (Left)	FC20	1.00	
26	103252A		Blade Angle Adjusting Bracke	FCD45	1.00	
27	103250		Blade Tension Sliding Plate	FC25	1.00	
28	103251		Anchor Block	FC25	1.00	
29	1965011		Column	FC20	1.00	
30	103008A		Scale	AL	1.00	
31	HH001	§ 2x5L	Rivet		2.00	
32	HS432	M8x20L	Hex. Socker Headless Screw		4.00	
33	HS278	M12x20L	Hex. Socket Head Screw		2.00	
34	103157		Blade Select Chart	paster	1.00	
36	HS527	M6x10L	Cross Round Head Screw		4.00	
37	HS242	M8x20L	Hex. Socket Head Screw		4.00	
38	1965052		Knob		2.00	
38	1965052		Knob		4.00	
39	HW005	M8	Washer		4.00	
40	HN005	M8	Hex. Nut		4.00	
41	198170		Pressure Gauge		1.00	
42	103328		Bushing	SS41	1.00	
43	HP023	§ 5X45L	Pin		2.00	
46	HW006	M10			1.00	
47	HW106	M10			1.00	
48	HS058	M10x20L			1.00	
49	103259		Gib	SS41	2.00	
50	HW105	M8	Spring Washer		6.00	
51	HS246	M8x40L	Hex. Socket Head Screw		6.00	
52	HW003	M5	Washer		2.00	
53	HW006	M10	Washer		1.00	
54	101116		Spring	SWC	1.00	
55	CA51204	51204	Bearing		1.00	
56	198051A		Blade Tension Handle		1.00	
56	103257		Handle Body	S25C	1.00	
57	103254		Bracket	SS41	1.00	
58	HS519	M5x10L	Cross Round Head Screw		2.00	
59	103261		Switch Base	SS41	1.00	
60	HS519	M5x10L	Cross Round Head Screw		2.00	
61	103253		Scale	SS41	1.00	
62	103256		Plate	SS41	1.00	
63	HS511	M4X20L	Cross Round Head Screw		2.00	
64	103327		Leadscrew	S45C	1.00	
64	103255		Leadscrew	S45C	1.00	

Part List

MOLDE:330N

CODE_NO	PART_NO	SPECIFICATION	DESCRIPTION	Material	QTY	NOTE
65	HS519	M5x8L	Cross Round Head Screw		2.00	
66	191415	同1018DR	Tension Indicating Plate		1.00	
67	HS262	M10x40L	Hex. Socket Head Screw		1.00	
68	HS229	M6x15L	Hex. Socket Head Screw		4.00	
69	HW104	M6	Spring Washer		4.00	
70	101008		Hemicycle Washer	S45C	1.00	
71	103258		Washer	SS41	1.00	
72	103260		Shaft Bushing	S45C	2.00	
73	HS231	M6x25L	Hex. Socket Head Screw		2.00	
74	103111		Shaft	S45C	1.00	
75	191404		Bushing	SS41	1.00	
76	HD608	§ 12	Hose Clamp		4.00	
77	HS519	M5x10L	Cross Round Head Screw		4.00	
78	1965014		Gib	S45C	1.00	
79	1965015		Blade Adjustable Knob	ABS	1.00	
80	HW006	M10	Washer		1.00	
81	103120A		Carbide Guide	carbide	4.00	
82	HS230	M6x20L	Hex. Socket Head Screw		4.00	
83	CA609ZZ	609ZZ	Bearing		2.00	
84	191414		Disc Spring	SUP9	13.00	
85	103027S		Bearing Shaft Assembly		2.00	
85-1	103027		Bearing Shaft	S45C	2.00	
85-2	CA609ZZ	609ZZ	Bearing		6.00	
85-3	HSC01	S10	C-Retainer Ring		2.00	
85	103027AS		Bearing Shaft Assembly		2.00	
85-1	103027A		Bearing Shaft	S45C	2.00	
85-2	CA609ZZ	609ZZ	Bearing		6.00	
85-3	HSC01	S10	C-Retainer Ring		2.00	
86	103028AS		Eccentric Shaft Assembly		2.00	
86-1	103028A		Eccentric Shaft	S45C	2.00	
86-2	CA609ZZ	609ZZ	Bearing		6.00	
86-3	HSC01	S10	C-Retainer Ring		2.00	
86	103028S		Eccentric Shaft Assembly		2.00	
86-1	103028		Eccentric Shaft	S45C	2.00	
86-2	CA609ZZ	609ZZ	Bearing		6.00	
86-3	HSC01	S10	C-Retainer Ring		2.00	
87	103026		Bearing Pin	S45C	2.00	
88	HS414	M5x10L	Hex. Socker Headless Screw		4.00	
89	HS422	M6x10L	Hex. Socker Headless Screw		2.00	
90	HS242	M8x20L	Hex. Socket Head Screw		2.00	
91	HW005	M8	Washer		4.00	
92	HS243	M8x25L	Hex. Socket Head Screw		4.00	
93	105013		Blade Guard (Front)	SS41	1.00	

Part List

MOLDE:330N

CODE_NO	PART_NO	SPECIFICATION	DESCRIPTION	Material	QTY	NOTE
94	196504		Label		1.00	
95	HW107	M12	Spring Washer		4.00	
96	HS283	M12x45L	Hex. Socket Head Screw		4.00	
97	HW106	M10	Spring Washer		4.00	
98	HS260	M10x30L	Hex. Socket Head Screw		4.00	
100	HS227	M6x5L	Hex. Socket Head Screw		2.00	
101	HS261	M10x35L	Hex. Socket Head Screw		4.00	
102	HW106	M10	Spring Washer		4.00	
103	HS258	M10x20L	Hex. Socket Head Screw		4.00	
104	HW106	M10	Spring Washer		4.00	
105	HW006	M10	Washer		4.00	
106	103106	AN07	Nut	S45C	2.00	
107	HW206	AW07	Washer		2.00	
108	191209		Bushing	SS41	1.00	
109	HS262	M10x40L	Hex. Socket Head Screw		2.00	
110	HW006	M10x20xt2	Washer		2.00	
111	103054		Bracket	FC20	1.00	
112	103053		Rack Hook	FC20	1.00	
113	103069		Pin	S45C	1.00	
114	HS422	M6x10L	Hex. Socker Headless Screw		2.00	
115	105093	use121052A	Wheel		1.00	
115-1	HW017	23*10.5-3			1.00	
116	HS230	M6x20L	Hex. Socket Head Screw		4.00	
117	103060		Cylinder Upper Support	FC15	1.00	
118	103078		Pivot Pin	S45C	1.00	
119	HS422	M6x10L	Hex. Socker Headless Screw		1.00	
120	HW005	M8	Washer		4.00	
121	HS242	M8x20L	Hex. Socket Head Screw		4.00	
122	HW105	M8	Spring Washer		2.00	
123	HS242	M8x20L	Hex. Socket Head Screw		2.00	
124	103059A		Cylinder Lower Support	FC15	1.00	
125	103079A		Pivot Pin	S45C	1.00	
126	HS422	M6x10L	Hex. Socker Headless Screw		1.00	
131	193030		Protractor Locating Block	S45C	1.00	
132	103026		Bearing Pin	S45C	1.00	
135	103106	AN07	Nut	S45C	1.00	
136	HW005	M8	Washer		2.00	
137	HS242	M8X20L	Hex. Socket Head Screw		2.00	
138	HW206	AW07	Washer		1.00	
139	19116S-1		Gear Box Assembly		1.00	
140	HN006	M10	Hex. Nut		1.00	
141	189033		Handle		1.00	
142	HS519	M5x10L	Cross Round Head Screw		2.00	

Part List

MOLDE:330N

CODE_NO	PART_NO	SPECIFICATION	DESCRIPTION	Material	QTY	NOTE
143	103136		Bracker	SS41	1.00	
144	623124	body	Knob	plastic	2.00	
145	103108	27x0.9x3810L-4/6T	Blade		1.00	
146	HK044	7x7x30L	Key		1.00	
147	HW006	M10	Washer		1.00	
148	HW106	M10	Spring Washer		1.00	
149	HS059	M10x25L	Hex. Head Screw		1.00	
150	101107		Base Support		2.00	
152	HS242	M8x20L	Hex. Socket Head Screw		2.00	
153	HS430	M8x10L	Hex. Socker Headless Screw		2.00	
158	103046C		Bracket	SS41	1.00	
158-1	105073			S45C	1.00	
159	HW106	M10	Spring Washer		4.00	
160	HW006	M10	Washer		4.00	
161	HS258	M10x20L	Hex. Socket Head Screw		4.00	
162	HN005	M8	Hex. Nut		1.00	
163	HS433	M8x25L	Hex. Socker Headless Screw		1.00	
164	103049		Blade Guard (Rear)	SS41	1.00	
165	HN006	M10	Hex. Nut		1.00	
166	191333		Spring	SUP6	1.00	
167S	103133S		Brush Assemble		1.00	
167-1	103133		Brush Shaft		1.00	
167-2	HE305	M6-1.0x40L	Cross Round Head Screw		1.00	
167-3	HW004	6.5*13-0.8t (M6)	Washer		3.00	
167-4	191334A		Brush		1.00	
167-5	HB802	M6	Hex. Nut		1.00	
172	HW004	M6	Washer		4.00	
173	103127	M6x10L	Plum Screw		4.00	
174	HS258	M10x20L	Hex. Socket Head Screw		3.00	
175	HS519	M5X8L(washer)	Cross Round Head Screw		1.00	
181	101061		Stop Block Support	FC15	1.00	
182	196213		Plum Screw		1.00	
182-1	HW004	M6	Plum Screw		1.00	
183	1966008		Distance Set Bracket	FC15	1.00	
184	HN006	M10	Hex. Nut		1.00	
185	HS060	M10x30L	Hex. Head Screw		1.00	
186	101078	pipe	Distance Set Rod		1.00	
186	101078A	scale	Distance Set Rod		1.00	
187	105213		Scale		1.00	
188	HH001	§ 2x5L			2.00	
190	105047		Blade Guard II (Rear)	SS41	1.00	
191	HS519	M5x10L	Cross Round Head Screw		2.00	
193	HB501	PT1/8	Grease Nipple		2.00	

Part List

MOLDE:330N

CODE_NO	PART_NO	SPECIFICATION	DESCRIPTION	Material	QTY	NOTE
194	103151		Motor Plate	SS41	1.00	
194	103151k		Motor Plate	SS41	1.00	
194-1	103151k-1		Bracket	SS41	2.00	
195	HW105	M8	Spring Washer		1.00	
196	HS247	M8x45L	Hex. Socket Head Screw		1.00	
197	HN007	M12	Hex. Nut		1.00	
197	HN007	M12	Hex. Nut		2.00	
198	103104		Screw	S45C	1.00	
199	HN006	M10	Hex. Nut		3.00	
199	HW007	M12	Washer		2.00	
200	1966033		Knob		1.00	
201	103102		Support Plate	SS41	1.00	
202	HS033	M6x12L	Hex. Head Screw		1.00	
204	HS284	M12x50L	Hex. Socket Head Screw		2.00	
204	HS284	M12x50L	Hex. Socket Head Screw		4.00	
205	103058		Rack Support	FC15	2.00	
209	HW105	M8	Spring Washer		4.00	
210	HS242	M8x20L	Hex. Socket Head Screw		4.00	
211	103056		Rack	FC25	1.00	
212	HK007	5X5X15L	Key		1.00	
213	103055		Acme Screw	S45C	1.00	
214	101025		Feed Support	FC20	1.00	
224	HS242	M8x20L	Hex. Socket Head Screw		1.00	
225	HW005	M8	Spring Washer		1.00	
226	103115		Washer Ring	SGP	1.00	
227	103101		Washer Ring	SGP	1.00	
229	105078		Ring	S45C	1.00	
230	103082		Pivot Shaft	S45C	1.00	
231	CA32007	32007	Bearing		2.00	
232	HS261	M10x35L	Hex. Socket Head Screw		4.00	
233	103088		Gap Ring	S45C	2.00	
234	101034		Degree-Meter	AL	1.00	
235	105063			S30C	1.00	
235-1	105062			SUP4	1.00	
235-2	105064			D45C	1.00	
236	HN006	M10	Hex. Nut		1.00	
235	HH001	§ 2x5L	Rivet		2.00	
240	HP018	§ 5x20L	Pin		2.00	
241	HS047	M8x25L	Hex. Head Screw		2.00	
242	HW005	M8	Washer		2.00	
243	103084A		Angle Position	FC20	1.00	
244	HO029	P12(rubber)	O-Retainer Ring		4.00	
246	HS046	M8x20L	Hex. Head Screw		2.00	

Part List

MOLDE:330N

CODE_NO	PART_NO	SPECIFICATION	DESCRIPTION	Material	QTY	NOTE
247	HN005	M8	Hex. Nut		2.00	
248	HN006	M10	Hex. Nut		1.00	
250	103128		Coolant Tank		1.00	
251	HS425	M6x12L	Hex. Socker Headless Screw		6.00	
252	HS243	M8x25L	Hex. Socket Head Screw		3.00	
253	103093		Angle Margin	FC20	1.00	
254	HS242	M8x20L	Hex. Socket Head Screw		2.00	
259	HS032	M6x10L	Hex. Head Screw		1.00	
260	HN004	M6	Hex. Nut		1.00	
261	191106A		Filter		1.00	
262	105210		Scale		1.00	
262-1	HH001	§ 2x5L	Rivet		2.00	
263	101113	M10x40L	Knob	AL	2.00	
264	HW009	§ 19x § 11x5t	Bushing		2.00	
265	101081A		Fix Block	S45C	1.00	
266	101037		2 Way Limit Block	SS41	1.00	
266-1	101037A		2 Way Limit Block	SS41	1.00	
267	HW104	M6	Spring Washer		4.00	
268	HS230	M6x20L	Hex. Socket Head Screw		4.00	
269	MB13304CR	HP1/8/400/50 /3	Cooling Pump	SS41	1.00	
270	HS033	M6x15L	Hex. Head Screw		4.00	
271	HW104	M6	Spring Washer		4.00	
272	1975007		Rubber Cushion	rubber	1.00	
275	HS520	M5x15L	Cross Round Head Screw		2.00	
276	1975008		Acryl Plate	acrly	1.00	
277	HS093	M12x50L	Hex. Head Screw		4.00	
278	HN007	M12	Hex. Nut		4.00	
279	101087		Splash Board	SPHC	1.00	
280	101085		Chip Tray	SPHC	1.00	
282	105037A		Locating Foot (Left)	FC25	2.00	
283	HS431	M8x12L	Hex. Socker Headless Screw		2.00	
284	105037		Locating Foot (Right)	FC25	2.00	
285	HW005	M8	Washer		8.00	
286	HS241	M8x15L	Hex. Socket Head Screw		8.00	
287	103094		Connecting Plate	SS41	4.00	
288	HW005	M8	Washer		12.00	
289	HS241	M8x15L	Hex. Socket Head Screw		12.00	
290	103004SA		Stand Leg	SS41	1.00	
292	HW005	M8	Washer		8.00	
293	HS241	M8x15L	Hex. Socket Head Screw		8.00	
294	103038		Splash Board	SPHC	1.00	
295	HW104	M6	Washer		2.00	
296	HS229	M6x12L	Hex. Socket Head Screw		2.00	

Part List

MOLDE:330N

CODE_NO	PART_NO	SPECIFICATION	DESCRIPTION	Material	QTY	NOTE
297	HS242	M8x20L	Hex. Socket Head Screw		2.00	
298	HW005	M8	Washer		4.00	
299	HN005	M8	Hex. Nut		2.00	
301	MFH2049		Motor		1.00	
302	101090	(1422) 360V	Belt		1.00	
303	103098		Motor Pulley Cover	SS41	1.00	
304	HS519	M5x10L	Cross Round Head Screw		4.00	
305	103156	E=1/30	Speed Label		1.00	
306	1965033S		Spindle Pulley		1.00	
308	HK044	7x7x30L	Key		1.00	
309	105099		Pulley Lower Cover	SS41	1.00	
310	105046		Cover	SS41	2.00	
311	HS518	M5x5L	Cross Round Head Screw		2.00	
312	HW004	M6	Washer		2.00	
313	HS228	M6x10L	Hex. Socket Head Screw		2.00	
324	HN006	M10	Hex. Nut		3.00	
325	HS062	M10x40L	Hex. Head Screw		3.00	
332	103039A		Stop Block Support	FC20	1.00	
333	103076		Distance Set Rod	bar	1.00	
334	HN006	M10	Hex. Nut		1.00	
335	HS062	M10x40L	Hex. Head Screw		1.00	
336	HS062	M10x40L	Hex. Head Screw		1.00	
337	HN006	M10	Hex. Nut		1.00	
338	HS219	M5x15L	Hex. Socket Head Screw		2.00	
339	105059		Lower Adjusting Support		1.00	
342	103088		Gap Ring	S45C	1.00	
344-1	HD636	PT3/8"xPT3/8"	Straight Connector		1.00	
344-2	HD638	PT3/8"X3(三通內牙)	3 Way Connector		1.00	
344-3	HD655	PT3/8"x1/2"	Straight Connector		1.00	
344-4	HD659	PT3/8"x1/2"	Micro Control Block		1.00	
344-5	103125-5	內徑 § 19	Hose Clamp		3.00	
344-6	103125-6	ID1/2"x2.8tx126cm	Net Tube		1.00	
344-7	103125-7	ID1/2"x2.8tx320cm	Net Tube		1.00	
344-8	103125-8	A-1061	Spray		1.00	
345-1	103126-1	1/4"x4.2cm	Copper Tube		2.00	
345-2	103126-2	PT1/8"x1/8"	Valve		2.00	
345-3	HD677	PT1/8"x1/4"	Straight Connector		2.00	
345-4	HD656	內徑 § 12	Hose Clamp		2.00	
345-5	103127-3	ID1/4"x2.2tx143cm	Net Tube		2.00	
346-1	HS232	M6x30L	Hex. Socket Head Screw		2.00	
346-2	105173		3 Way Valve	SS41	1.00	
346-3	HD650	PT1/4"x1/4"	Straight Connector		1.00	
346-4	HD656	內徑 § 12	Hose Clamp		2.00	

Part List

MOLDE:330N

CODE_NO	PART_NO	SPECIFICATION	DESCRIPTION	Material	QTY	NOTE
346-5	103127-3	ID1/4"x2.2tx143cm	Net Tube		1.00	
346-6	HD625	PT1/4"x1/4"	Micro Control Block		1.00	
346-7	103125-5	內徑§19	Hose Clamp		1.00	
346-8	103127-4	ID1/4"x2.2tx64cm	Net Tube		1.00	
346-9	103127-5	ID1/2"x2.8tx320cm	Net Tube		1.00	
346-10	HD632	PT1/4"x1/2"	Micro Control Block		1.00	
347	HS520	M5x12L	Cross Round Head Screw		2.00	
348	1976027		Switch Adjusting Bracket	SS41	1.00	
349	105023		Switch Bracket(For CE Only)	SS41	1.00	
350	HW003	M5	Washer		2.00	
351	105054		Switch Bracket(For CE Only)		1.00	
352	HS228	M6x10L	Hex. Socket Head Screw		2.00	
354	103152		Motor Bracket	SS41	1.00	
355	HS242	M8x20L	Hex. Socket Head Screw		4.00	
356	103134		Support Sheet	SS41	1.00	
357	HS219	M5x15L	Hex. Socket Head Screw		2.00	
358	HS046	M8x18L	Hex. Head Screw		1.00	
359	HS045	M8x15L	Hex. Head Screw		1.00	
360	103135B		Bracket	SS41	2.00	
361	HS228	M6X10L	Hex. Socket Head Screw		4.00	
362	103137		Twisted Spring	SW-B	2.00	
363	103135C		Support Rod	SS41	2.00	
364	105056		**Blade Cover**		1.00	
365	HS228	M6x10L	Hex. Socket Head Screw		2.00	
366	105057		**Limit Switch Support**		1.00	
367	HS519	M5x10L	Cross Round Head Screw		2.00	
370	103135A		Bracket	SS41	2.00	
377	103213		Ring		4.00	
378	103214	plastic	Flexible Plate		2.00	
379	HS243	M6X20L	Hex. Socket Head Screw		6.00	
383	HN004	M6	Hex. Nut		6.00	
384	HW004	M6	Washer		6.00	
394	HS046	M8x20L	Hex. Head Screw		1.00	
412	103003		**Hanger Plate**	SS41	4.00	
415	HCR06	R52孔用	C-Retaniner Ring		2.00	
416	CA30205J	30205J	Taper Roller Bearing (30205J)		2.00	
417	105060		Cover	SUS304	3.00	
418	HW313	AW05	Star Washer		2.00	
419	1965043		Nut		1.00	
420	HB501	PT1/8	Grease Nipple		1.00	
421	105065		Bolt	SS41	1.00	
422	105066		Bracket	SS41	1.00	
423	105067		Screw rod	SS41	1.00	

Part List

MOLDE:330N

CODE_NO	PART_NO	SPECIFICATION	DESCRIPTION	Material	QTY	NOTE
424	105068		Knob	SS41	1.00	
430	105087A		Limit Switch Adjusting Brack	SS41	1.00	
431	103092		Shaft	SS41	1.00	
432	103107		Scale	SS41	1.00	
433	195083	1/4"X12L	Knob	SS41	1.00	
462	103166	5/16"N	3 Way Connector		2.00	
469	HW105	M8	Spring Washer		16.00	
470	HS241	M8x15L	Hex. Socket Head Screw		16.00	
471	103141		Switch Bracket	SS41	1.00	
472	HW012	ø6.3xø13xt1.2	Washer		1.00	
473	HS228	M6x10L	Hex. Socket Head Screw		1.00	
474	HS519	M5x10L	Cross Round Head Screw		2.00	
477	HS044	M8x10L	Hex. Head Screw		2.00	
490	151130		Bracket	SS41	1.00	
491	HW005B	M8(染黑)	Washer		4.00	
492	HS242	M8X20L	Hex. Socket Head Screw		4.00	
493	HW005B	M8(染黑)	Washer		4.00	
494	HS349	M8X15L	Hex. Socket Head Screw		4.00	
496	HW004B	M6(染黑)	Washer		4.00	
497	HS334	M6X12L	Hex. Socket Head Screw		4.00	
500	151132		Body Frame B	FC25	1.00	
501	151131		Body Frame A	FC25	1.00	
502	HN005B	M8	Hex. Nut		3.00	
503	HS432	M8X20L	Hex. Socker Headless Screw		2.00	
504	151174	M8XP1.25*25L	Knob	鋁鋅	1.00	
505	HW005B	M8	Washer		4.00	
506	HS349	M8X15L	Hex. Socket Head Screw		4.00	
507	151129		Bracket		1.00	
508	HW004B	M6	Washer		6.00	
509	HS334	M6X12L	Hex. Socket Head Screw		6.00	
515	151127		Control Box	SS41	1.00	
516	HW003B	M5	Washer		4.00	
517	HS331	M5X12L	Hex. Socket Head Screw		4.00	
518	HW003B	M5	Washer		4.00	
519	HS331	M5X12L	Hex. Socket Head Screw		4.00	
520	151175		Knob	S30C	2.00	
521	HW003B	M5	Washer		4.00	
522	HS331	M5X12L	Hex. Socket Head Screw		4.00	
525	133170		Valve	S30C	1.00	
525-1						
525-2	ET1639	220V-5			1.00	
524	HT001	M5X10L	Round Head Screw		2.00	
527	151161		Connect Shaft	S30C	1.00	

Part List

MOLDE:330N

CODE_NO	PART_NO	SPECIFICATION	DESCRIPTION	Material	QTY	NOTE
528	HS422	M6X10L	Hex. Socker Headless Screw		1.00	
530	103072k		Switch Plate	AL	1.00	
531	HW003B	M5	Washer		6.00	
532	HS331	M5X12L	Hex. Socket Head Screw		6.00	

MANUFACTURER:
ADDRESS:
SERIAL No.:

PLEASE WRITE DOWN THE SERIAL NO. ON THIS BLOCK FROM THE NAME PLATE AFTER YOU RECEIVE THIS MACHINE.